海宫 210x290mm 20P (16Kx10张) 彩色印刷 2025-7-11 08:49:30

Dimplex®

INSTRUCTION MANUAL

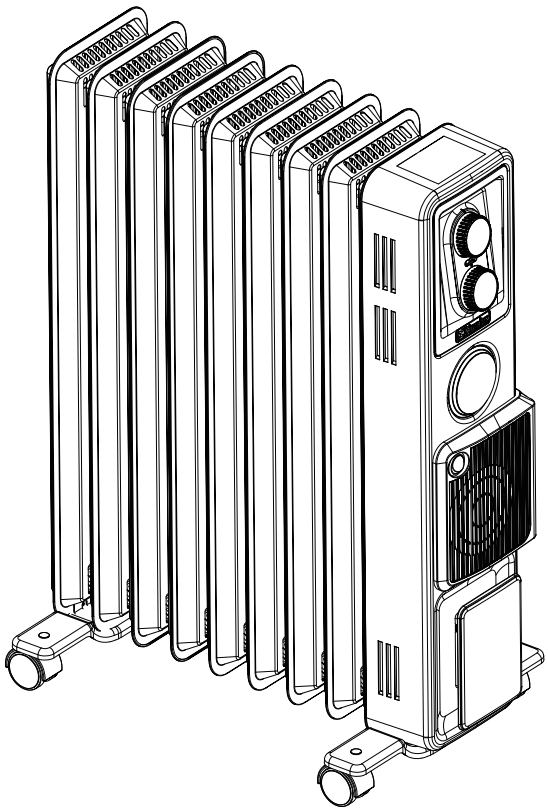

Oil Free Column Heaters

Models: ECR24TiFB

For domestic household use only.

This product is only suitable for well insulated spaces or occasional use.

Important Safety Advice

IMPORTANT
THESE INSTRUCTIONS SHOULD BE READ CAREFULLY BEFORE USE AND RETAINED FOR FUTURE REFERENCE.

WARNING: To avoid danger of suffocation please remove all packaging materials particularly plastic and EPS and keep these away from vulnerable people, children and babies.

WARNING: To avoid the risk of accidental strangulation from the supply cord all children and vulnerable people must be supervised when in the vicinity of the product whether it is working or not.

DO NOT use the heater in the immediate surroundings of a bath, a shower or a swimming pool.

DO NOT place the heater directly below a fixed socket outlet. The socket-outlet must always be accessible to enable the mains plug to be disconnected as quickly as possible.

WARNING: To avoid overheating, do not cover the heater.

 The heater carries a warning symbol to alert the user to the risk of fire that exists if the heater is accidentally covered.

DO NOT obstruct the air circulation around the heater, for example with curtains or furniture, as this could cause overheating and a fire risk.

DO NOT COVER or obstruct the air inlet and outlet openings in any way.

WARNING: DO NOT use this heater in small rooms when they are occupied by persons not capable of leaving the room on their own, unless constant supervision is provided.

IMPORTANT: If the supply cord of this appliance is damaged, it must be replaced by the manufacturer, its service agent or similarly qualified person to avoid a hazard.

WARNING: To avoid a hazard due to inadvertent resetting of the thermal cut-out, this appliance must not be supplied through an external switching device, such as a timer, or connected to a circuit that is regularly switched on and off by the utility.

This appliance can be used by children aged from 8 years and above and persons with reduced physical, sensory or mental capabilities or lack of experience or knowledge if they have been given supervision or instruction concerning the use of the appliance in a safe way and understand the hazards involved.

Children shall not play with the appliance. Cleaning and user maintenance shall not be made by children without supervision. Children of less than 3 years should be kept away unless continuously supervised. Children aged from 3 years and less than 8 years shall only switch on/off the appliance if it has been placed or installed in its intended normal operating position, and they have been given supervision or instruction concerning the use of the appliance in a safe way and understand the hazards involved. Children aged from 3 years and less than 8 years shall not plug in, regulate and clean the appliance or perform user maintenance.

CAUTION: SOME PARTS OF THIS PRODUCT CAN BECOME VERY HOT AND CAUSE BURNS. Particular attention must be given where children and vulnerable people are present.

This heater complies with stringent safety standards but to ensure efficient operation, **SURFACES OF THE HEATER WILL BECOME HOT AND CONTACT WITH THESE AREAS SHOULD BE AVOIDED,** particularly between the fins.

The control panel area is designed to be cooler and always allow safe operation of the controls.

IMPORTANT: The feet supplied with the appliance must be used.

Use this heater on a horizontal and stable surface with the feet securely fitted.

DO NOT use this heater if it has been dropped.

DO NOT use if there are visible signs of damage to the heater.

WARNING: Servicing and product repairs should only be undertaken by the manufacturer or by their approved service agent.

WARNING: To reduce risk of fire, keep textiles, curtains, or any other flammable material a minimum distance of 1m from the appliance.

WARNING: Risk of fire – Do not use this appliance connected through an extension lead or any external switching device such as a plug-in timer or remote-control plug-in adaptor. All heating appliances draw high current through the mains supply and any weakness in the design, connections or components in these devices can easily result in overheating of the connection points resulting in melting, distortion and even the risk of fire!

DO NOT use the heater on deep pile carpets or the long hair type of rugs, or less than 750mm (30”) away from any overhanging surface. Keep combustible materials such as drapes and other furnishings clear from the front, sides and rear of the heater. Do not use heater to dry your laundry.

DO ENSURE that the mains lead cannot be tripped over.

DO NOT operate the heater with the mains lead overhanging the outlet grille. If the heater is tipped over, unplug it and allow it to cool before standing it back up.

DO NOT pull, carry or move the appliance using the power cable.

DO NOT insert or allow foreign objects to enter any ventilation or exhaust opening as this may cause an electric shock, fire or damage the heater.
DO NOT use the heater outdoors.

The supply cord should be uncoiled before use.

This instruction leaflet belongs to the appliance and must be kept in a safe place. If changing owners, the leaflet must be surrendered to the new owner.

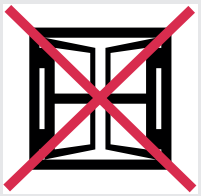

Exposed to the weather outdoors



Near water



If the power cable wires are frayed or cut



Where small children may be left unattended



No extension leads or power boards



Where the power cable may be damaged



On a slope or uneven surface



Where there is risk of fire or close to a naked flame



Where it may be damaged by chemicals



Where there is a risk of interference by foreign objects



This product is not made for DIY repair



If there is a risk of water falling on the unit

Electrical connection

WARNING: This Appliance must be earthed.

If the socket outlets in your home are not of the 13-amp BS1363 type they will not accept the plug connected to this heater, therefore cut off the plug. When cut off this plug can constitute a shock hazard if inserted into a socket outlet. It must therefore be disposed of safely.

IMPORTANT: The wires in this mains lead are coloured in accordance with the following code:

BLUE: NEUTRAL

BROWN: LIVE

GREEN & YELLOW: EARTH

As the colours of the wires in the mains lead may not correspond with the coloured markings in your plug, proceed as follows:

Connect the BROWN wire to the terminal marked 'L' or coloured RED. Connect the BLUE wire to the terminal marked 'N' or coloured BLACK. Note: 'L' or 'N' must not be connected to the EARTH terminal marked 'E' or '⏚' or coloured GREEN or GREEN AND YELLOW. If in doubt, consult your electrician.

Specifications

Model no.	ECR24TiFB
Power supply	230-240V~, 50Hz
Rated power	2400W
Heat settings	3
Thermostat	Y
Timer	Y
Turbo Fan	Y
Weight (net)	10.5 kg
Dimensions (w x d x h)	490x280x630mm

For greater precision, please always refer to the rating label placed on the product.

Fitting The Castors

WARNING The radiator must only be operated with the wheels and castors fitted and in an upright position. The castors must be fitted to the underside of the control panel and on the bracket between the last and second last fin on the opposite end, as shown in **Fig.1**.

1. To fit the castors, turn the radiator upside down on a carpet or other soft surface to avoid damage. **Warning:** The radiator is heavy – ensure that it is supported to prevent it from toppling. Ask a second person to help with this if necessary.
2. To fit the castors, position the castor plates (A) in position and secure using the wing bolts provided (B). There are guides to ensure the correct positioning and orientation of the castor plate.
3. Return the radiator to the correct orientation so it rests on the castors. The product is now ready for use.

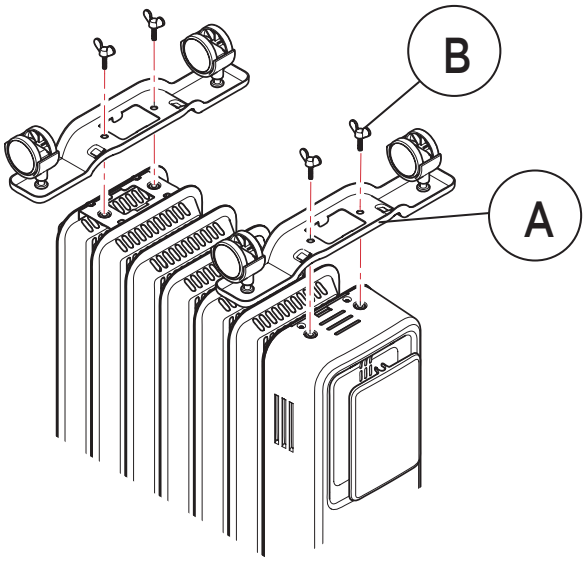

Fig. 1

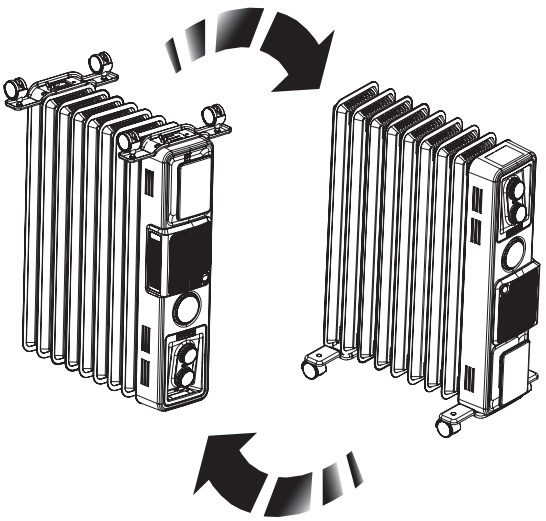

Positioning

Select the position for the heater ensuring there is clearance from any furniture and fittings of at least 300mm above the heater and 150mm each side and 300mm from the control and end panel. We recommend maximising the clearance where possible.

NOTE: The radiator is designed for operation on an AC electricity supply, and is only suitable for domestic use and similar indoor locations.

Tips

- The radiator is fitted with castors and a handle for ease of movement.
- A rotary selector switch provides the ability to choose an available heat output and an adjustable thermostat enables the room temperature to be controlled accordingly.
- Once the castors have been correctly fitted, no other assembly is required, just plug and play!

Safety Features

This appliance incorporates a number of safety devices. In addition to the 'Important Safety Advice' section your attention is drawn to the following;

Tilt Switch

The tilt switch will prevent the heater from working if it is accidentally tipped over on its side.
If the radiator is tipped over while it is hot, disconnect the power and allow it to cool, then stand the radiator back upright. Reconnect the power - normal operation should be resumed.

Overheat Protection

The heater is fitted with a temperature limiter which will reduce the output of the heater should it overheat for any reason. The product will return to normal operation after the cause of the over heating has been rectified.

Operation

IMPORTANT - OBJECTS OR CLOTHING MUST NOT BE PLACED ON THIS HEATER.

Before using the heater ensure that all warnings and instructions have been read carefully. To activate the heater simply plug it in. Neon indicator lights located at the control area will illuminate when the appliance is plugged into the mains. This indicates the appliance is energised and ready to use.

Please note – The element has been coated with a protective film which will burn off during the first few minutes of use, this may cause a small amount of fuming. This is quite normal – the fumes are non-toxic and will quickly disappear.

We recommend that you open a window to ventilate the room when using the heater for the first time.

CONTROLS

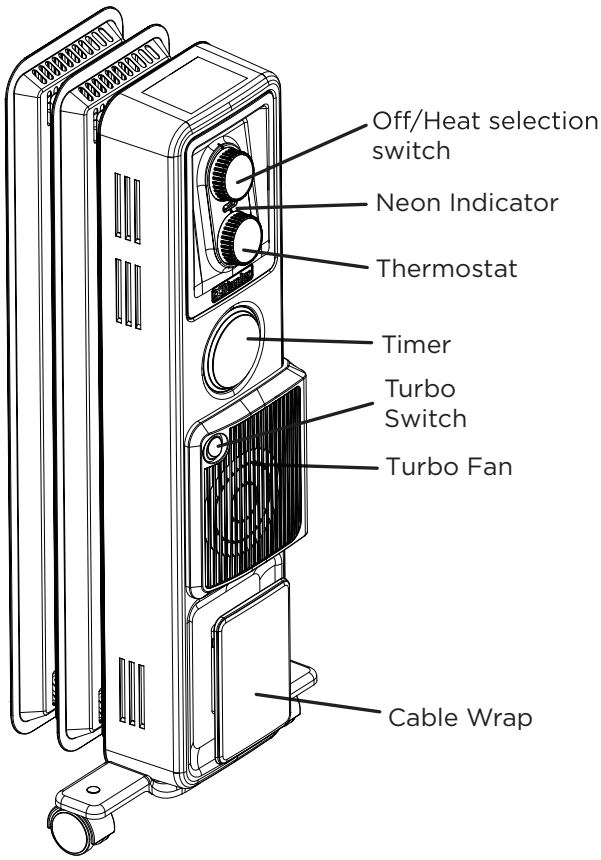

Fig. 2

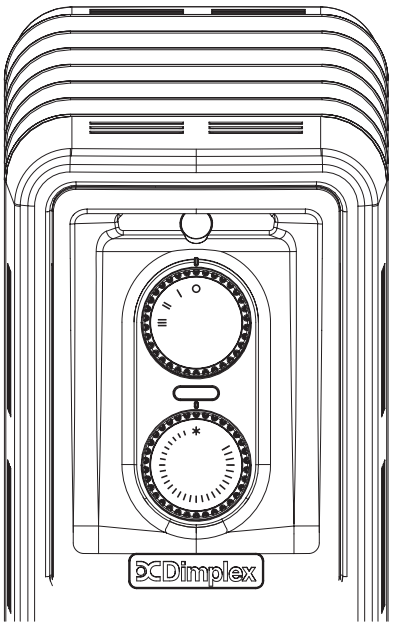

Fig. 3

Thermostat
The Thermostat, see **Fig.2** controls the heat output according to the room temperature. This ensures that the heater will not produce heat unnecessarily when the room is warm.

1. To set the temperature you require, turn the thermostat knob clockwise until the required setting is reached. Alternatively to heat a cold room quickly, turn the thermostat knob up fully.
2. When the room has reached the desired temperature, turn the thermostat knob anti-clockwise until the thermostat just clicks off. The heater will now automatically operate at this temperature.
3. The thermostat also has a frost protection setting marked '*' This setting is useful in areas such as garages, to prevent frost damage. If the thermostat is set to its minimum setting '*' the heater will cycle on and off to maintain a temperature of approximately 5° to help protect against frost.

Note – Should the heater fail to come on when the thermostat is at a low setting, this may be due to the room temperature being higher than the thermostat setting.

Heat Selector Switches (see Fig.3)
Heat selection is provided via a rotary switch offering four settings. The heat output can be altered to suit the application, conditions and for improve the economy of operation.

Available output options are as follows:

	Switch setting				**With Turbo Fan ON**	**Only Turbo Fan ON**
Model	O	I	II	III		
ECR24TiFB	Off	700W	1400W	2100W	2400W	300W

Timer model

ELECTROMECHANICAL TIMER (TIF models)

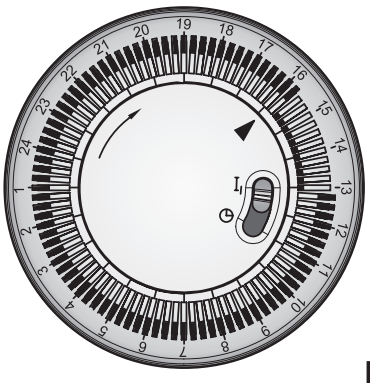

Fig. 4

Setting the time of day

To set the time of day, rotate the timer dial clockwise (indicated by the arrow) until the correct time of day is opposite the reference mark ▶ - see **Fig.4**. The 24-hour clock is used; e.g. time shown for 4pm is '16' (16:00hrs).

Operation Modes

Set the operation mode using the slide switch on the timer - see **Fig.5**:

Position I - Manual operation

This setting allows power to the heater uninterrupted by the timer settings. The heat selector switch and thermostat will control the output (see 'Controls').

Position ⏲ - 'Auto' operation

This setting allows the heater to be switched ON and OFF according to a set 24 hour program period.

DO NOT disconnect this heater from the mains supply unless it is being taken out of use (e.g. in summer or for storage), otherwise the timer clock will stop.

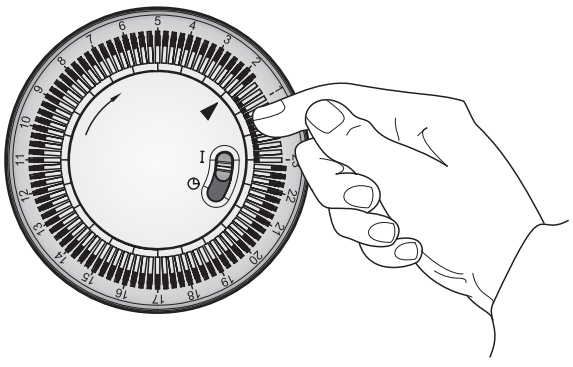

Fig. 5

Setting the 'Auto' ON and OFF times

To set the timer:

1. Using your fingertip or tip off a pencil, push in as many segments as necessary around the dial, according to the times you don't require heat - see **Fig.5**. Each segment pushed in switches the heater OFF for that part of the hour All other segments will be ON. For example, **Fig.5** shows the timer set to switch the heater OFF between 11pm and 1.45am.
2. You can select as many ON periods as you like, within the 24-hour day. The settings will repeat every day until changed.
3. To change ON and OFF times, simply push in any 'ON' segments you wish to cancel and pull out new 'ON' segments as required.

NOTE: each segment represents 15 minutes

Turbo fan

The turbo fan is used to boost the heat output and also the airflow around the room. This circulates the heat and results in a reduced heat up time and a more even heat distribution. The turbo fan is controlled by the switch on the front of the product, **Fig.2**.
The turbo can be turned on independently of the heat.

Cleaning

Over time, dust can accumulate on the heater which can effect performance. It is recommended to clean the unit at least once a month.

1. Turn the unit OFF and disconnect the appliance from the power supply.
2. Remove any dust build up with a soft brush.
3. Wipe the surface of the unit with a soft damp cloth. Mild detergent can be used for any stubborn marks.

IMPORTANT
The control panel and other parts must not come into contact with water or any other liquids.

Storage
If the productwill be stored for an extended period of time, then please ensure:

- Control switch is OFF and remove plug from the power outlet.
- To cover the unit and store it upright in a location where it will not receive direct sunlight. NB- Prolonged exposure to direct sunlight will discolour the unit.

Recycling



For electrical products sold within the European Community. At the end of the electrical product's useful life, it should not be disposed of with household waste. Please recycle where facilities exist. Check with your Local Authority or retailer for recycling advice in your country. If you don't intend to keep the packaging of this product for later use or storage, please dispose of it in an environmentally friendly way, please dispose of it in your recycling bin or nearest recycling facility, thank you.

Additional Information

Model identifier(s)			ECR24TiFB
Heat output	**Symbol**	**Value**	**Unit**
Nominal heat output	Pnom	2.4	kW
Minimal heat output (indicative)	Pmin	0.7	kW
Maximum continuous heat output	Pmax, c	2.4	kW
Auxiliary electricity consumption			
At nominal heat output	elmax	0.0	kW
At minimum heat output	elmin	0.0	kW
In standby mode	elSB	0.0	kW
Type of heat output / room temperature control			
Mechanical thermostat room temperature control			Yes
Contact details: UK: Glen Dimplex Heating and Ventilation, Millbrook House, Southampton, Hampshire, England, SO30 2DF ROI: Glen Dimplex Ireland UC, Airport Road, Cloghran, Co. Dublin K67 DT89			

Guarantee

To view the full guarantee terms and conditions scan this QR code using your smartphone or go to https://www.gdhv.co.uk/guarantee-terms-and-conditions.

What does a Dimplex Guarantee cover?

Dimplex products deliver reliable service for normal, household use in domestic settings. All Dimplex products are individually tested before leaving the factory.

If you are a consumer and you experience a problem with your Dimplex product, which is found to be defective due to faulty materials or workmanship within the Guarantee Period, this Dimplex Guarantee will cover repair or - at the discretion of Dimplex – replacement with a functionally equivalent Dimplex product.

Your product is under Guarantee for 1-year from the date of purchase or the date of delivery of the product, if later. The 1-year Guarantee is extended for an additional 2-year when you register the product with Dimplex, within 28 days of purchase. If you do not register the product with Dimplex within 28 days, your product will remain warrantied for 1-year only.

To validate your extended Guarantee, register with us online at:

http://register.dimplex.co.uk.

Note: Each qualifying product needs to be registered with Dimplex individually. Please note that the extended Guarantee is only available in the UK and Ireland.

The Dimplex Guarantee is conditional upon you providing the original purchase receipt as proof of purchase. Please therefore retain your receipt as proof of purchase.

If you do experience a problem with your Dimplex product, please call the

Helpline on **+44 [0]344 879 3588** or visit

https://www.dimplex.co.uk/support.

For ROI, please email serviceireland@glendimplex.com or call
+353(0)1 842 4833.

We will need details of your Dimplex product and a description of the fault which has occurred. Once we receive your information and proof of purchase, we will contact you to make the necessary arrangements. If your Dimplex product is not covered by this Dimplex Guarantee, there may be a charge to repair your product. However, we will contact you for agreement to any charges before any chargeable service is carried out.

What is not covered by a Dimplex Guarantee?

The Dimplex Guarantee does not cover any of the following:

Any fault or damage to your Dimplex product due to faulty materials or workmanship occurring outside the Guarantee Period. Normal wear and tear including parts that might wear out over time or consumables, such as filters, batteries, etc.

Any fault or damage occurring to any pre-owned Dimplex product or to any other equipment or property. Accidental damage to your Dimplex product or damage to your Dimplex product from external sources (for example, transit, weather, electrical outages or power surges).

Fault or damage to your Dimplex product which is:

• Not due to faulty materials or workmanship or which is due to circumstances outside Dimplex's control.

• Caused by use of your Dimplex product for anything other than normal domestic household purposes in the country where it was purchased.

• Caused by any misuse, abuse or negligent use of the Dimplex product, including but not limited to any failure to use it in accordance with the Operating Instructions supplied with the product.

• Caused by any failure to assemble, install clean and maintain your Dimplex product in accordance with the Operating Instructions supplied with the product unless this was carried out by Dimplex or its authorised dealers.

• Caused by repairs or alterations to your Dimplex product not carried out by Dimplex service personnel or its authorised dealer(s).

• Caused by use of any consumables or spare parts for your Dimplex product which are not Dimplex - specified.

Terms and Conditions

The Dimplex Guarantee is valid for 1 calendar year, plus 2 if registered, from the date of purchase of your Dimplex product from a recognised retailer in the country of purchase and use, or the date of delivery of the product if later, always provided the original receipt has been retained and is produced as proof of purchase.

You must provide to Dimplex or its authorised agents on request the original receipt as proof of purchase and - if required by Dimplex - proof of delivery. If you are unable to provide this documentation, you will be required to pay for any repair work required.

Any repair work under the Dimplex Guarantee will be carried out by Dimplex or its authorised dealer(s) and any parts that are replaced will become the property of Dimplex. Any repairs or replacement performed under the Dimplex Guarantee will not extend the Guarantee Period.

The Dimplex Guarantee does not entitle you to recovery of any indirect or consequential loss or damage including but not limited to loss or damage to any other property.

The Dimplex Guarantee is in addition to your statutory rights as a consumer and your statutory rights are not affected by this Dimplex Guarantee.

Customer Care Centre

If you are having problems with your appliance or have any questions about what the Dimplex Guarantee covers or how to claim under the Dimplex Guarantee, please contact us:

Telephone: +44 344 879 3588

Visit: www.dimplex.co.uk

Glen Dimplex Heating and Ventilation, Millbrook House, Southampton, Hampshire, England, SO30 2DF

Customer Care Centre:

Telephone: +44 344 879 3588
Visit: www.dimplex.co.uk

Glen Dimplex Heating and Ventilation,
Millbrook House, Southampton,
Hampshire, England, SO30 2DF

This product complies with all the required European and UK Product Safety, Electromagnetic Compatibility and Environmental Standards. They are fully compliant with the LVD, EMC, RoHS and Eco Design Directives and Regulations.

© Glen Dimplex. All rights reserved. Material contained in this publication may not be produced in whole or in part, without prior permission in writing of Glen Dimplex.

Printed in China.

ECR24TiFB IM Issue 2