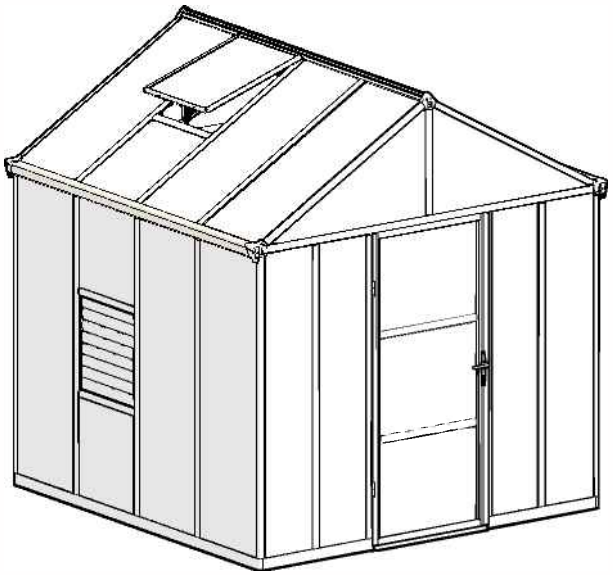
PALRAM



Assembly Instructions

Glory™ 8'x8' - Premium Class Greenhouse

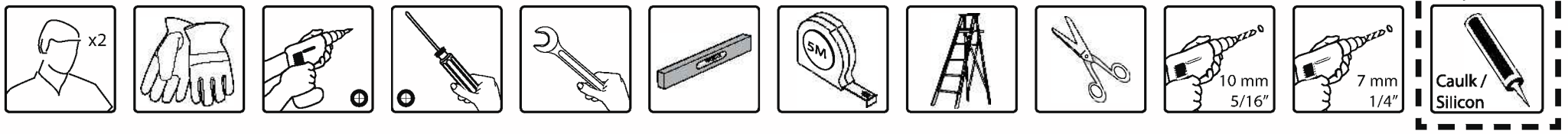
Approx. Dim.

244L x 244.5W x 268.5Hcm / 96.3"L x 96.3"W x 105.7"H

4' Extention Module

119.5L x 244.5W x 268.5Hcm / 47"L x 96.3"W x 105.7"H





After Sale Service

Email: customer.service@palram.com

USA	877-627-8476	**England**	01302-380775	**France**	0169-791-094
Canada	1 800-866-5749	**Germany**	0180-522-8778	**International**	+972 4-848-6942

www.palram**applications**.com

14.11_Languages_78360_V2

EN

IMPORTANT
Please read these instructions carefully before you start to assemble this greenhouse.
Keep these instructions in a safe place for future reference.

» Customer Service

For assistance with assembly or for replacement parts – please log onto our website or call our service line (number is on the title page).

Additional information can be found at our website: www.palramapplications.com

» Safety Advice
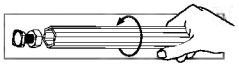
- It is of utmost importance to assemble all of the parts according to the directions. Do not skip any step.
- We strongly recommend using work gloves during panels' sliding.
- Always wear shoes and safety goggles when working with extruded aluminium.
- If using a step ladder or power tools make sure that you follow the manufacturer's safety advice.
- Do not touch overhead power cables with the aluminium profiles.
- Do not attempt to assemble the greenhouse in windy or wet conditions.
- Dispose of all plastic bags. Keep them out of reach of small children.
- Keep children away from the assembly area.
- Do not lean against or push the greenhouse during construction.
- Do not position your greenhouse in an area exposed to excessive winds.
- Do not attempt to assemble this greenhouse if you are tired, have taken drugs or alcohol or if you are prone to dizzy spells.
- Hot items such as recently used grills, blowtorches etc. must not be stored in the greenhouse. Make sure there are no hidden pipes or cables in the ground before inserting the pegs.
- This product is designed to be used as a greenhouse only.
- **Note:** You should anchor the greenhouse directly to a solid foundation; Make sure that there are no obstructions between the assembly area and the final position.

» Care & Maintenance

- When your greenhouse needs to be cleaned, use a mild detergent solution and rinse with cold clean water.
- DO NOT use acetone, abrasive cleaners or other special detergents to clean the clear panels.

» Tools & Equipment

- Work gloves
- Phillips head screwdriver
- Adjustable Spanner / Wrench
- Leveler
- Tape measure
- Step ladder
- Scissors
- Electric screwdriver (10mm, 7mm, Phillips)
- Lubricant (Optional)
- T001 - Special tool for Screws 411 and nuts 412



» Before Assembly

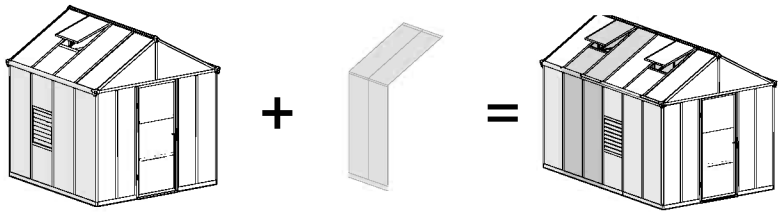
- ☑ Selecting a site:
  - The greenhouse must be positioned and fixed on a flat level surface.
  - Choose a sunny position away from overhanging trees.
- ☑ We strongly recommend this greenhouse to be secured directly to a solid concrete foundation.
- ☑ This is a multi-part assembly best achieved by two people. Allow at least half a day for the assembly process.
- ☑ Take all components & parts out of the packages. Sort the parts and check against the content parts list.

  Parts should be laid out close at hand. Keep all small parts (screws etc.) in a bowl so they do not get lost.
- ☑ Please note multi-sided profiles are used in this greenhouse. As a result some holes in the profiles are not used during assembly.
- ☑ Please review entire instructions before starting. Carry out the assembly steps in exact order.
- ☑ Prior to fitting the Automatic Vent Opener, the power-tube has to be cooled by placing it in a refrigerator for approximately 30 minutes.
- ☑ The drawings in this manual are designed for 8' x 8' greenhouse + 4' Extension Kit. Please note that content list refers only for 8x8 greenhouse.

  Note: all the extension module steps are marked with a dashed outline integrally in the greenhouse assembly process.

EN

8'x8' 4' Ext. 8'x12'



Model	Base Length	No. of Packages
Glory Standard (8' x 8')	244.5 cm / 96.3"	2
Glory + 4' Ext. (8' x 12')	364 cm / 143.3"	3
Glory + 4' Ext. x2 (8' x 16')	483.5 cm / 190.4"	4
Glory + 4' Ext. x3 (8' x 20')	603 cm / 237.4"	5

» During Assembly

- You may use Silicon lubricant spray in order to help you slide the panels into the profiles.
- Do not spray the Polycarbonate panels.
- Use a rubber mallet if necessary.
- All panels with the stamped words THIS SIDE OUT must be facing out to create full UV protection. Remove plastic sticker as panels are locked in place.
- The Auto Vent Opener has a separate assembly instruction in its own package.

During assembly you will encounter the information icon, please refer to the relevant assembly step for additional comments and assistance.

This icon indicates that the installer should be inside the product.

This icon indicates that the installer should be outside the product.

Step 1: Paste an insulating tape on each open ends of all panels (including panels in the Extension package)

Step 11: Please make sure the screw connection is made exactly as illustrated.
A - Connect the screw in the left hole. **B** - Connect the screw in the right hole.

Step 22: Part **7943** (Side Louver Window) can be located only on one of the two central panels.

* If you assemble the greenhouse with an extension module, the window can be placed on all panels, except for the last two end panels.

* **Note:** The selected placing will affect the next assembly steps.

Step 33: Roof window can be located only on one of the two central roof panels.

* If you assemble the greenhouse with an extension module, the roof windows must be placed on panels only as specified in the manual.

* **Note:** The selected placing will affect the next assembly steps.

Step 38: Please tighten screws from inside the greenhouse. In addition, please tighten the remaining loose screws.

Step 43: As mentioned at the **'Before Assembly' section,** prior to fitting the **Automatic Vent Opener**, the power-tube has to be cooled by placing it in a refrigerator for approximately 30 minutes.

Step 52: Door can be installed as a left hand door or right hand door as per your decision. These instructions show a right hand door assembly. Please determine door opening direction. This decision will affect the next assembly steps.

Step 54: Please adjust the hinges height in accordance with the upper post and lower ramp of the door aperture, as specified in **Level C**.

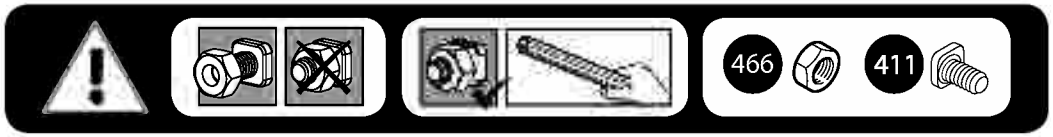
Step 58: Threading parts **7888** exactly as specified in **Level C**, is very important in order to create good drainage.

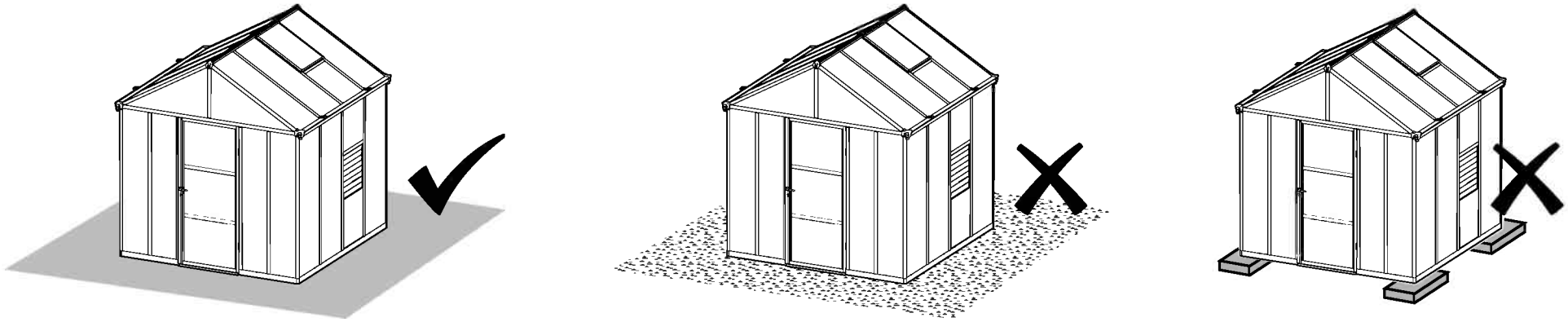
Step 62: Anchor the greenhouse only onto a hard surface (supplied bolts fit only hard surface such as concrete or asphalt).

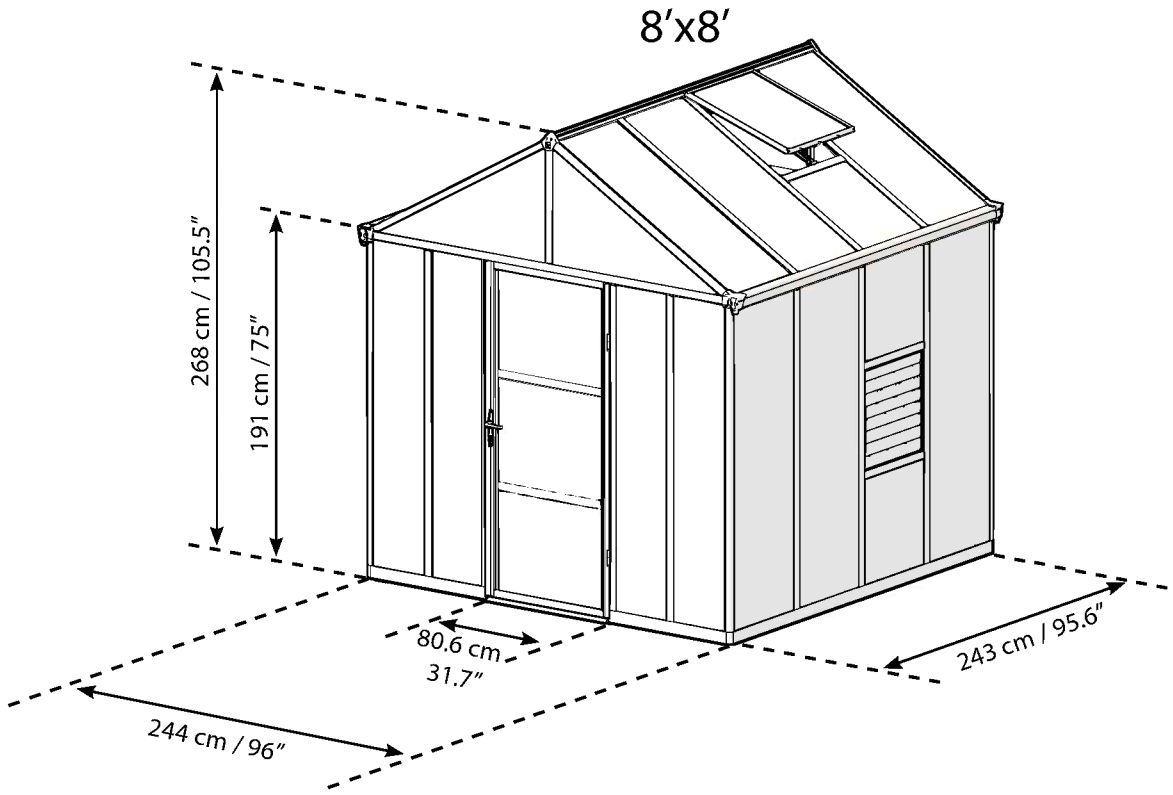
⚠ Important Recommendations

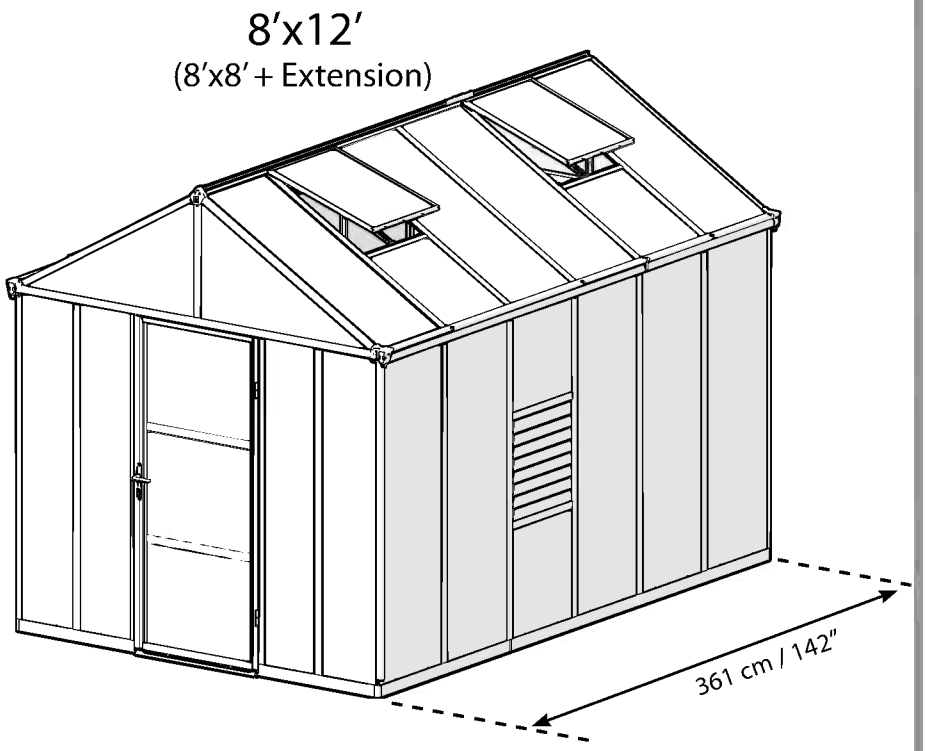
- **Firmly connect the greenhouse to a level surface immediately after completion of the assembly.**
- **Tighten all screws once assembly is completed.**

- Screws 411 and nuts 466 are used throughout the assembly process.
- Screws 411 are to be assembled from the outside and nuts 466 from the inside of the greenhouse.
- If not specified otherwise, do not fasten screws and nuts (411 & 466) more than 2-3 turns only. Do not tighten them until completion of the panels' assembly. These 2 icons indicate if screws' tightening is required or not.
- However, in some steps, temporary tightening of a few screws may be needed to prevent a profile from falling.

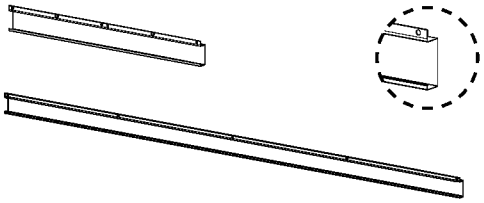
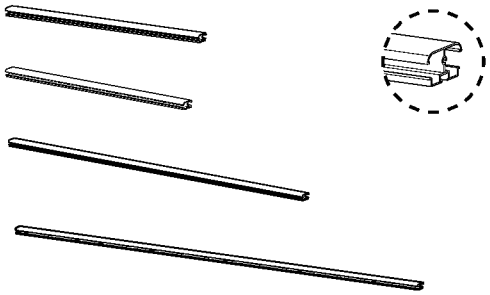
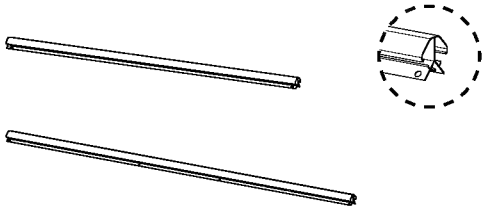


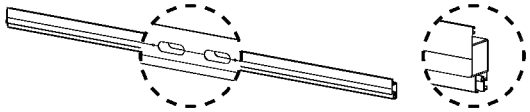
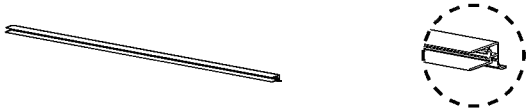


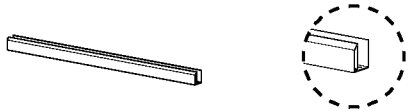
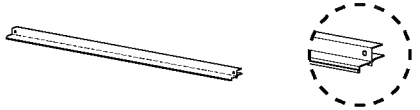
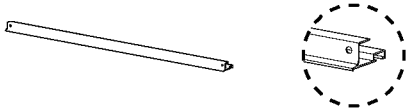

8′x8′
268 cm / 105.5″
191 cm / 75″
80.6 cm
31.7″
243 cm / 95.6″
244 cm / 96″

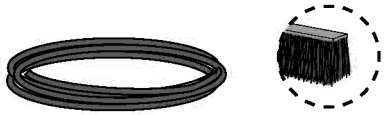
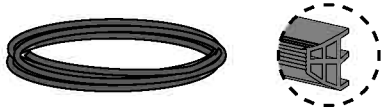
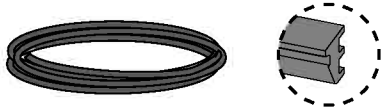

8′x12′
(8′x8′ + Extension)
361 cm / 142″

Contents

Item		Qty.
7895		1
7896		1
7899		2
7599		3
7887		2
7891		2
7885		6
7892		11
7890		1
7884		2
7880		4
7889		4

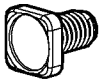
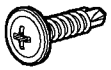
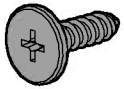
Item		Qty.
7883		2
7881		1
7882		1
7888		2
7879		1
7878		2
7886		2
256		8

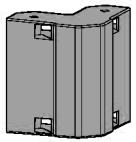
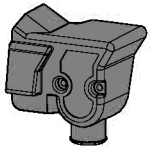
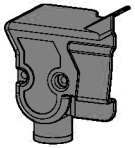
Item		Qty.
7893		2
989		1
991		1

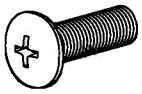
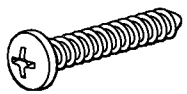
7914		2
8017		1
7868		1
7869		1

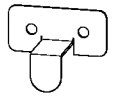
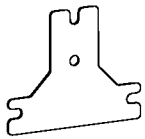
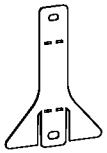
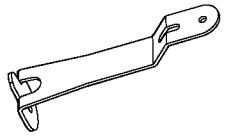
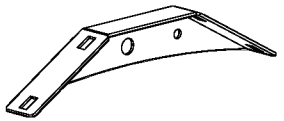
Contents

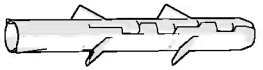
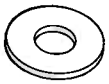
Item		Qty.
7904		2
7903		2
7906		7
7902		4
7901		11
7907	 59 x 74 cm 23″x29″	1
7900	 59 x 62 cm 23″x24″	3
7905	 62 x 71.5 cm 24″x28″	3

Item		Qty.
461		32 (+2)
411		114 (+15)
466		146 (+15)
7958		5
8010		2
7523		6
4008		10 (+5)
7445		4
7442		22 (+2)
4043		2

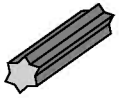
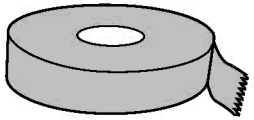
Item		Qty.
7602		4
7908		2
7909		2
7910		2

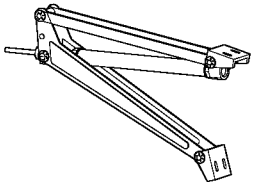
Item		Qty.
4016		2
425		2
413		2
450		12 (+2)

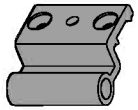
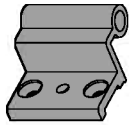
Item		Qty.
8016		1
7898		6
7894		6
7897		2
8038		8
8037		6

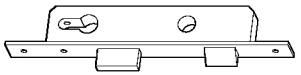
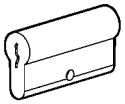
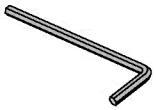
4000		8
4010		8
433		8

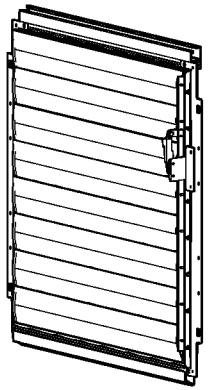
Contents

Item		Qty.
T001		1
70		10
7009		2
8101		1

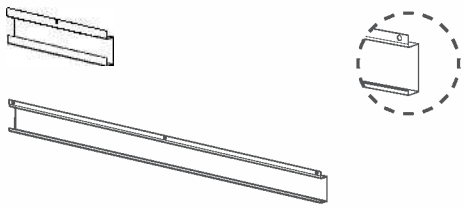
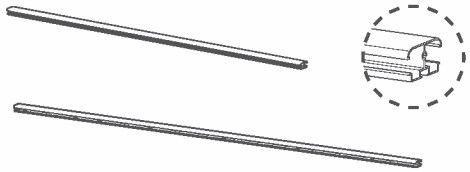
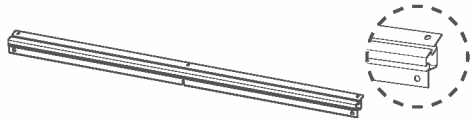
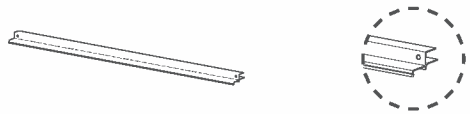
7942		1
964		2
465		4
422		4

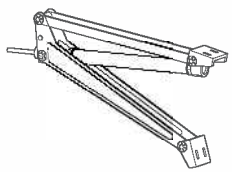
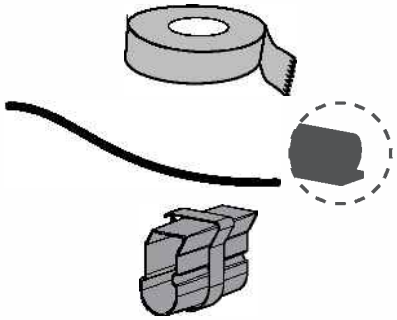
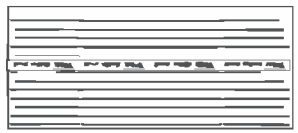
Item		Qty.
7923		4
7919		2
7918		2
7920		2
7921		2
7924		8
7922		2

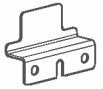
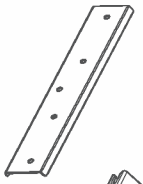
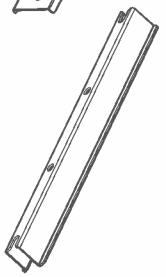
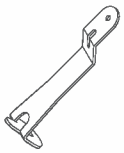
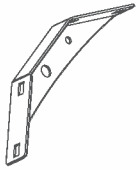
Item		Qty.
7994		1
7995		1
7996		2
7948		2
7912		1
7913		1
8039		3
7993		1

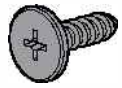
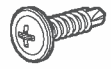
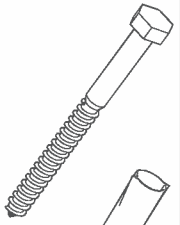
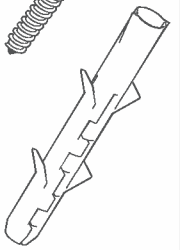
7943		1

Contents Extension Kit

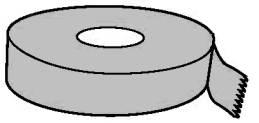
Item		Qty.
7601		2
7597		2
7885		4
7892		4
7926		1
7927		2
7928		2
989		1
991		1
7878		2
7890		1

Item		Qty.
7942		1
964		2
465		4
422		4
8102		1
7914		2
7911		2
7900	 59 x 74 cm 23"x29"	1
7907	 59 x 62 cm 23"x24"	1
7906		3
7901		4

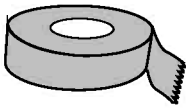
Item		Qty.
7898		2
7894		4
7944		2
7930		1
7929		2
7931		1
8038		2
8037		3

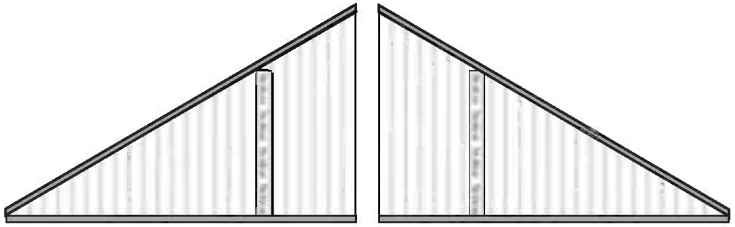
Item		Qty.
461		16 (+2)
411		44 (+5)
466		64 (+7)
7442		16 (+2)
4008		2 (+5)
4000		2
4010		2
433		2
7009		2

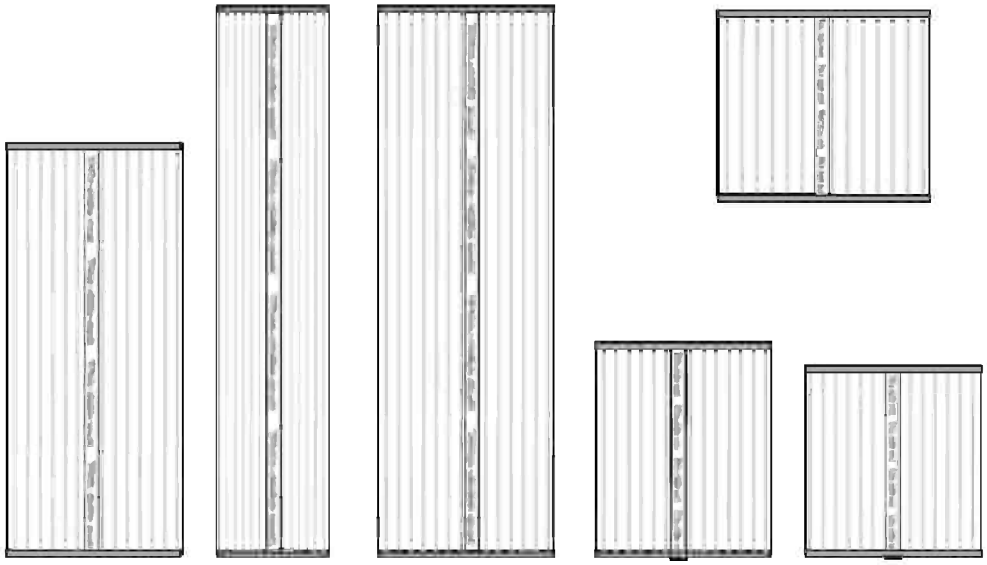
1

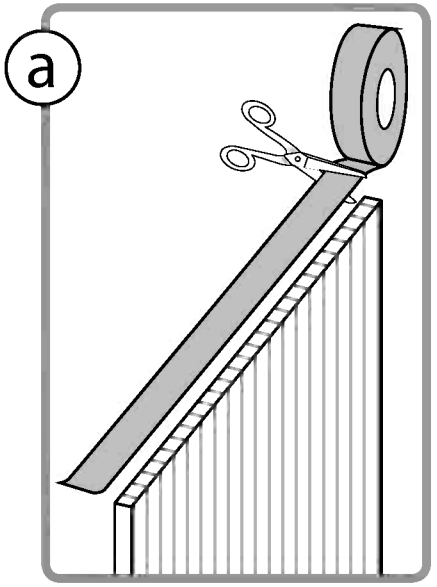
8101 .....  1

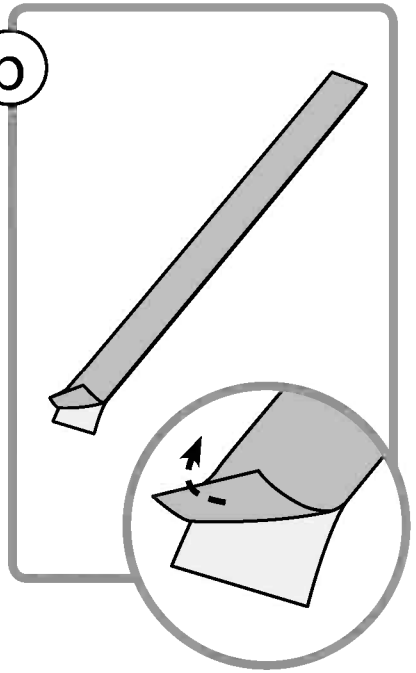
Extension Kit

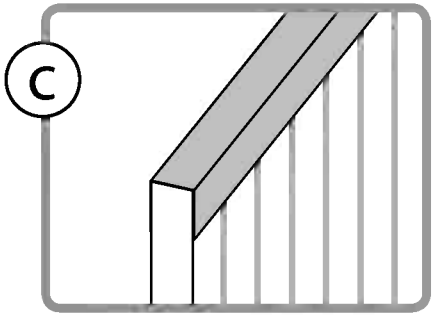
8102 .....  1



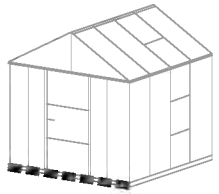






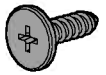


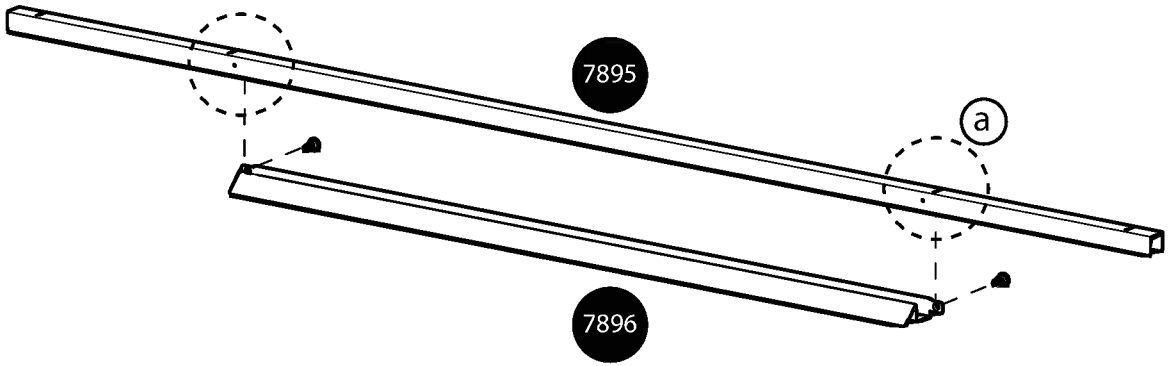
2

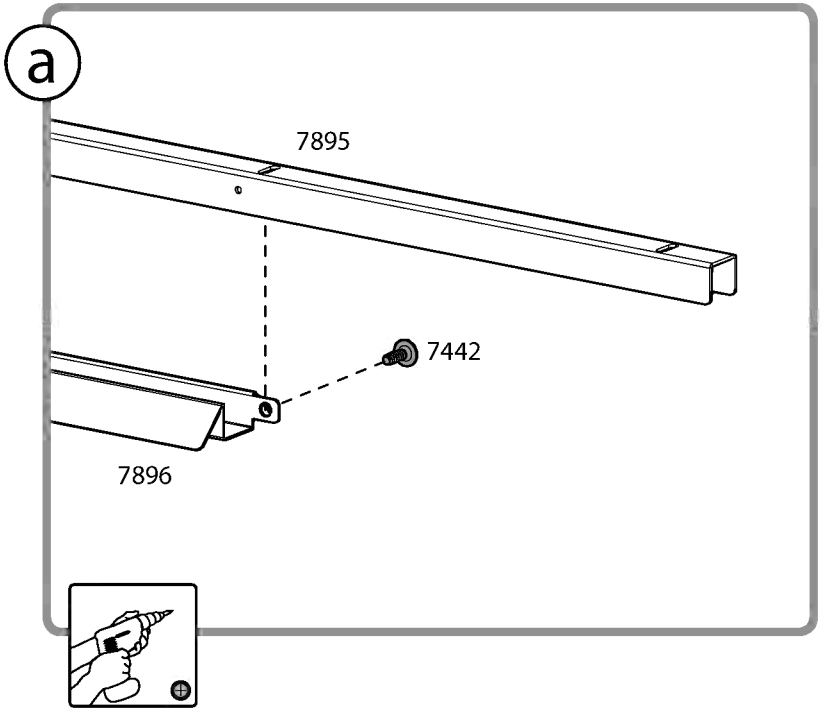


7895 .....  1

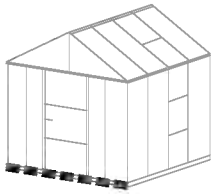
7896 .....  1

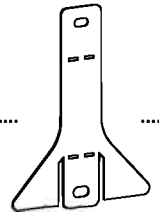
7442 .....  2

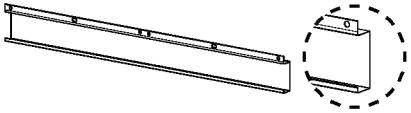


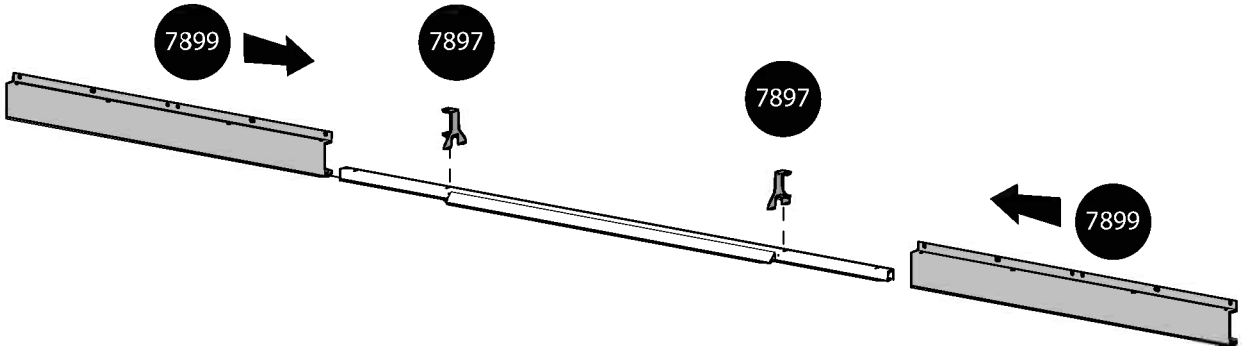


3



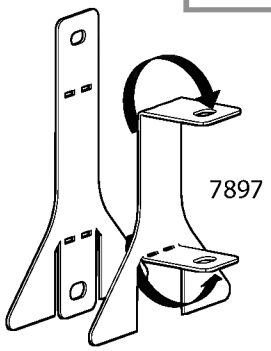
7897 .....  2

7899 .....  2

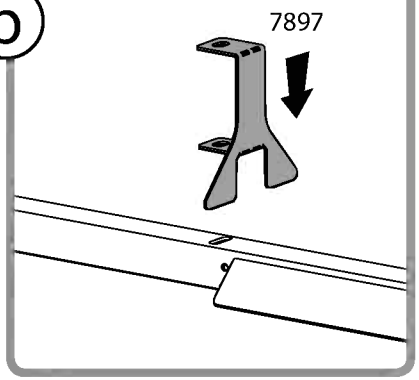


x2

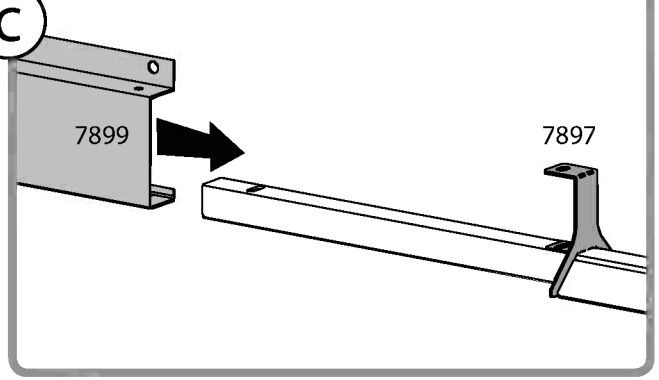
a

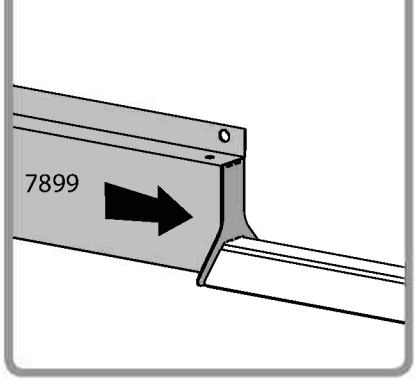


b

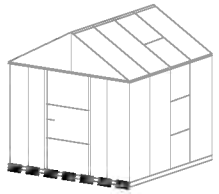


c





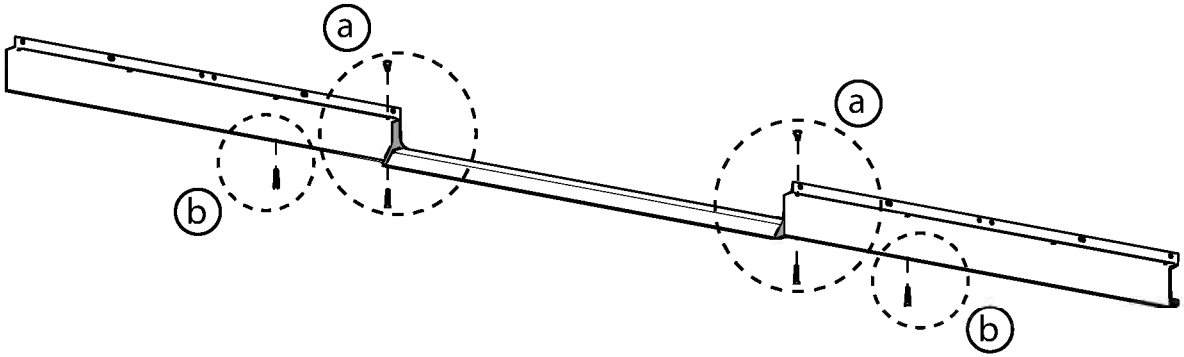
4

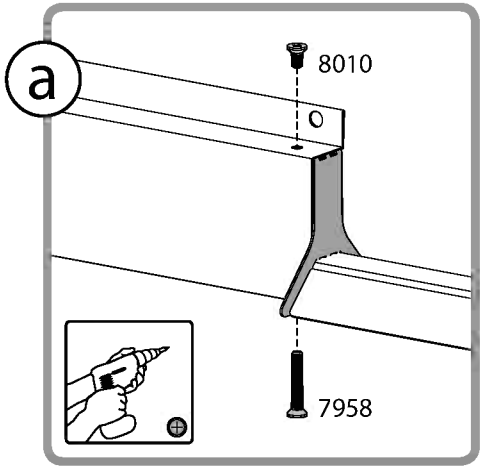


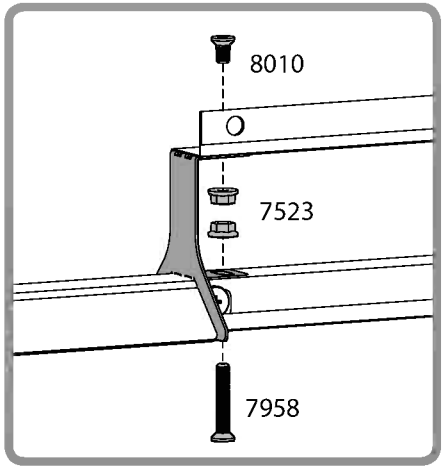
7958 .....  4

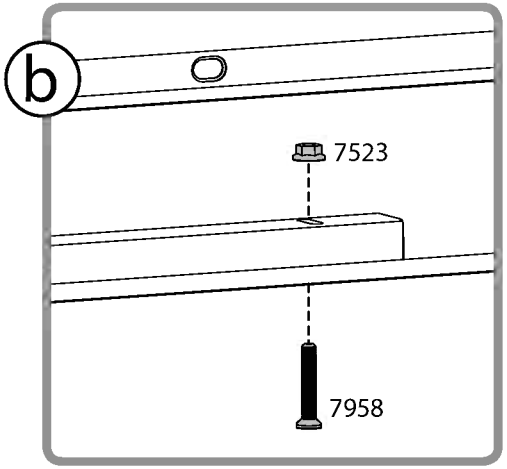
7523 .....  6

8010 .....  2

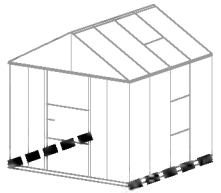








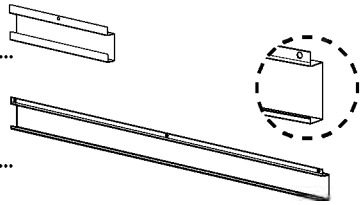
5 For Extension Kit Only



7599 .....



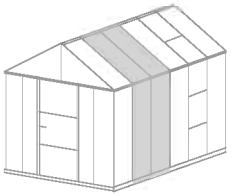
7601 .....



7597 .....

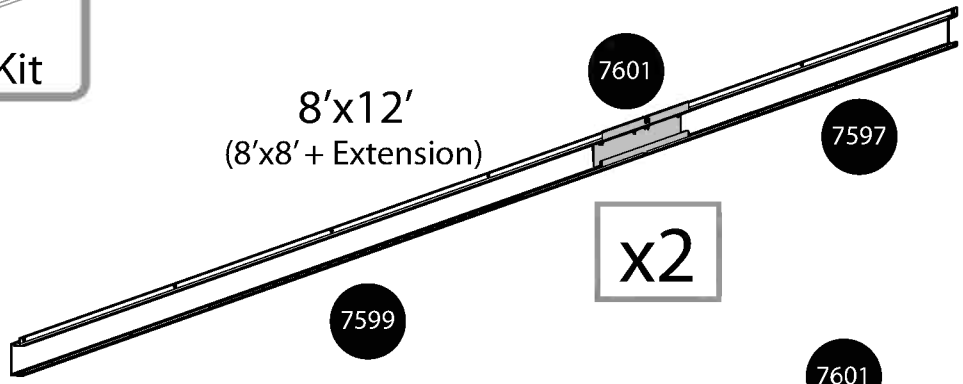
7442 .....



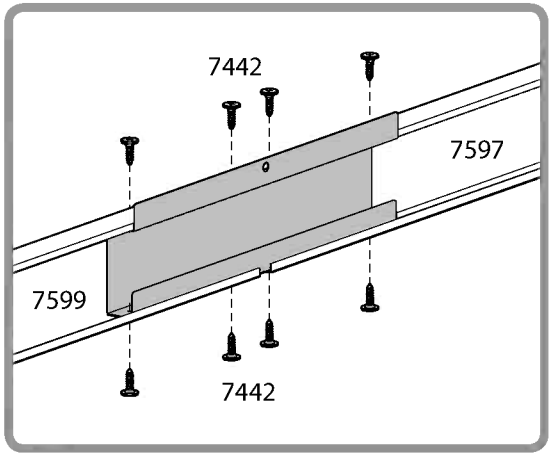


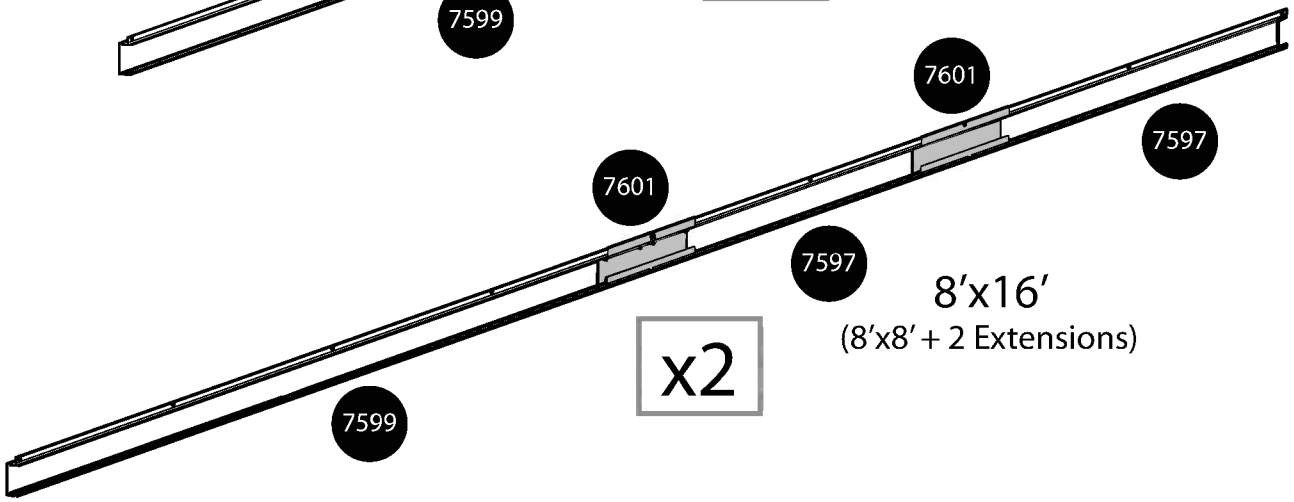
Extension Kit

8′x12′
(8′x8′ + Extension)



x2

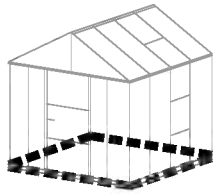


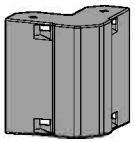


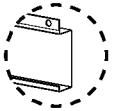
8′x16′
(8′x8′ + 2 Extensions)

x2

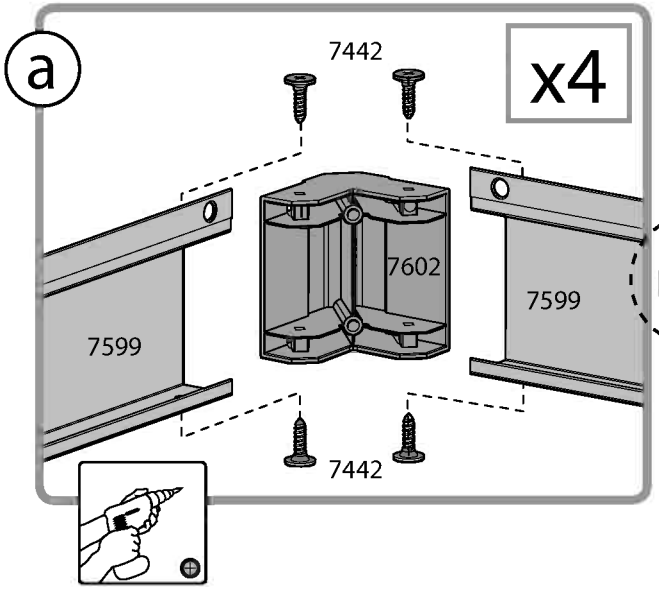
6

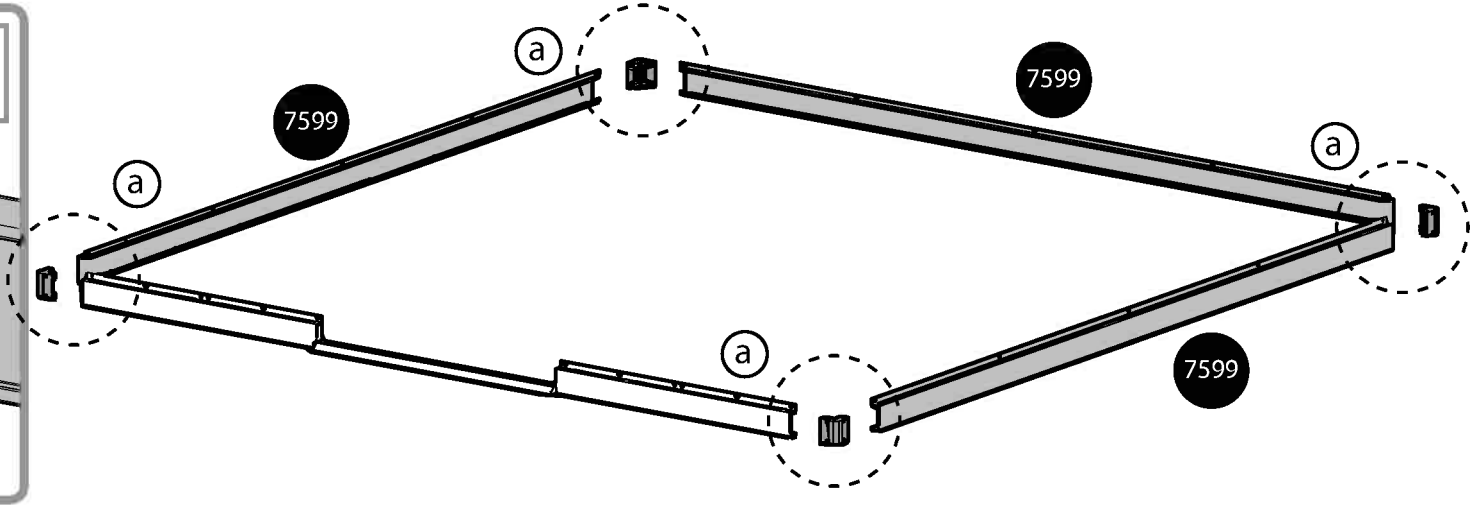


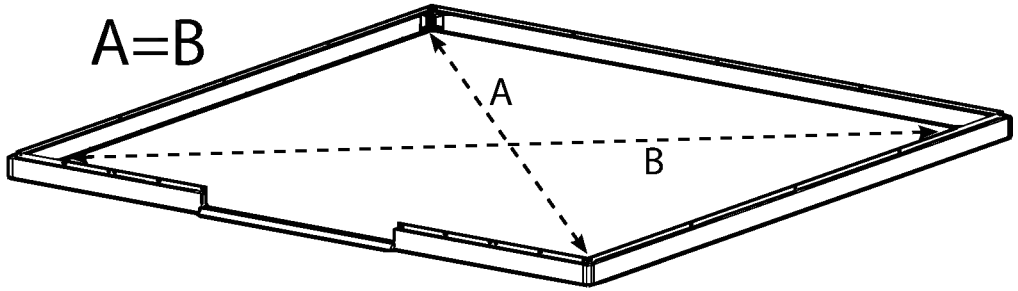
7602 .....  4

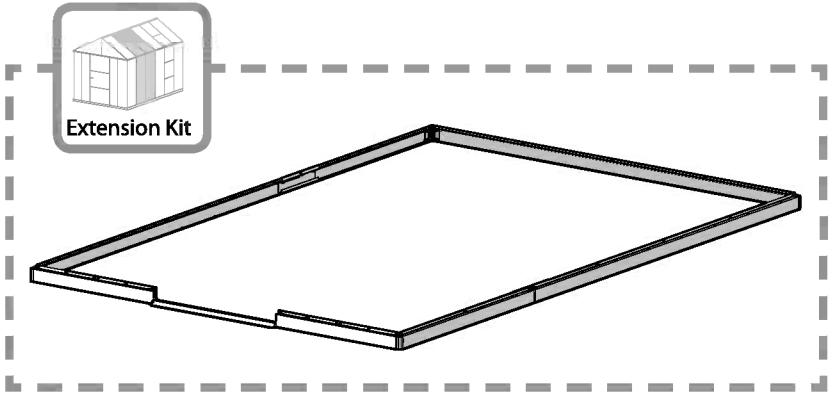
7599 .....   3

7442 .....  16

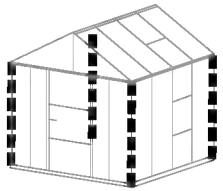








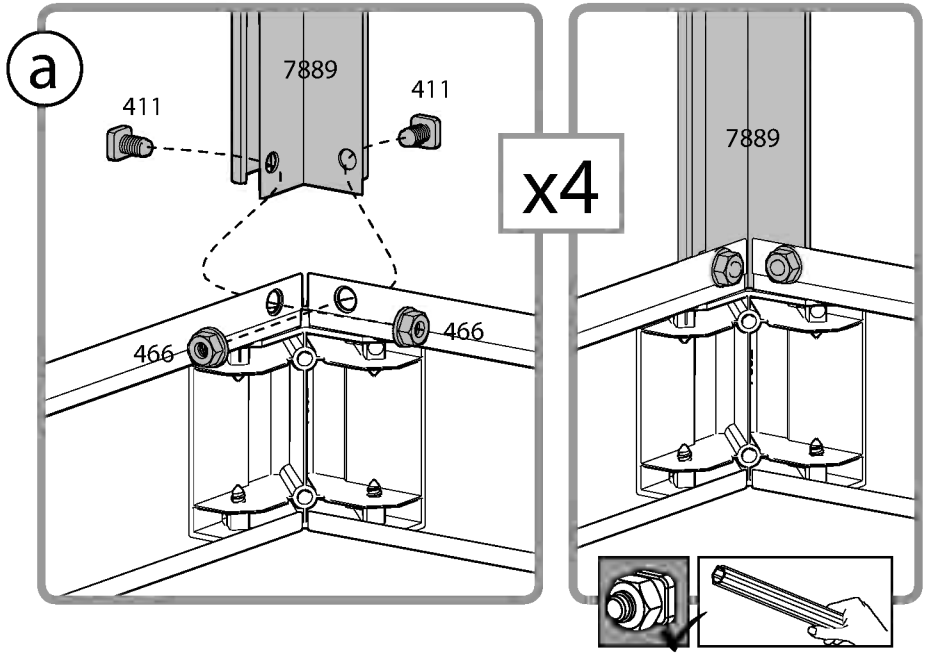
7

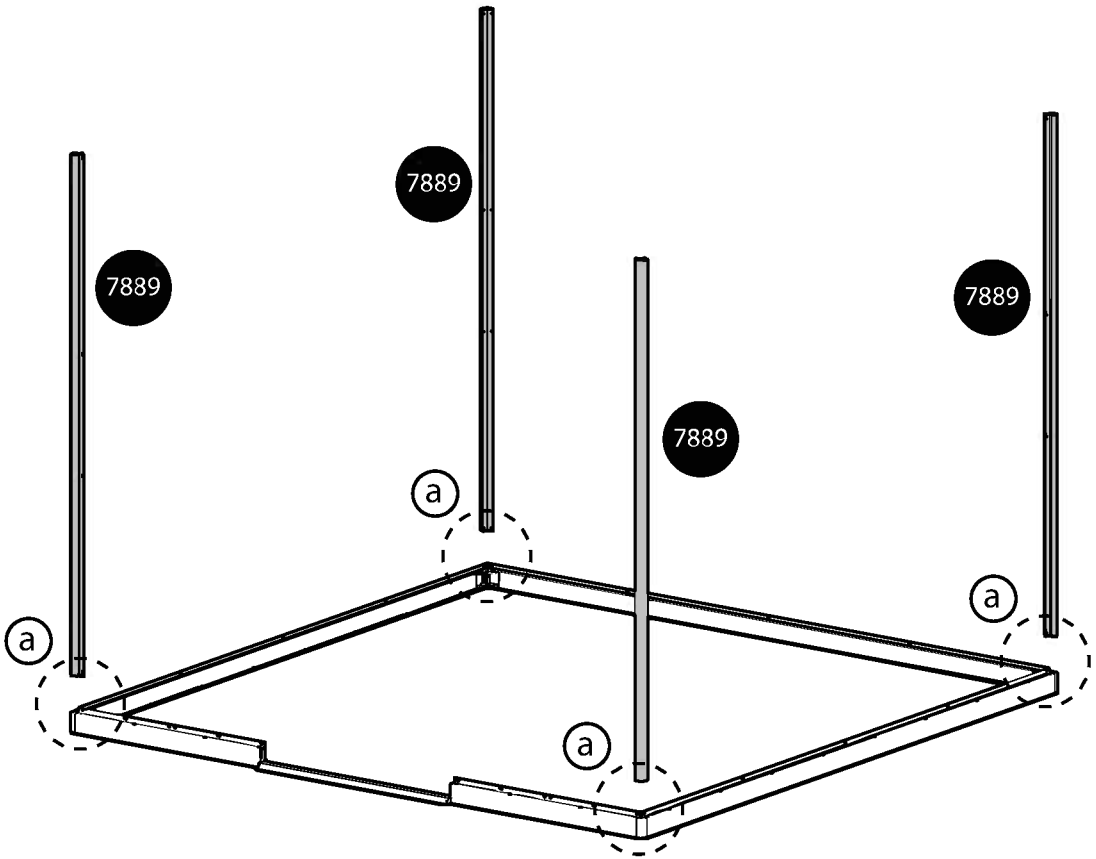


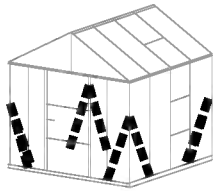
7889 .....  4

411 .....  8

466 .....  8





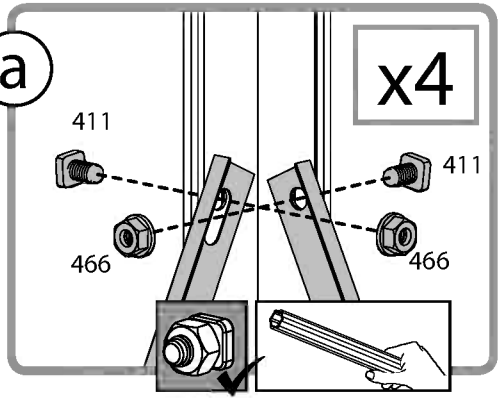


256 .....   8

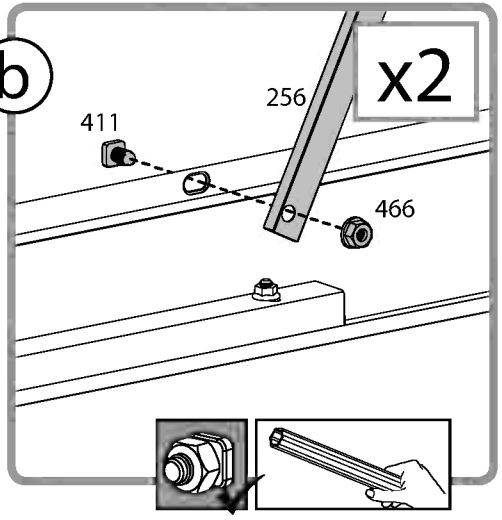
411  16

466  16

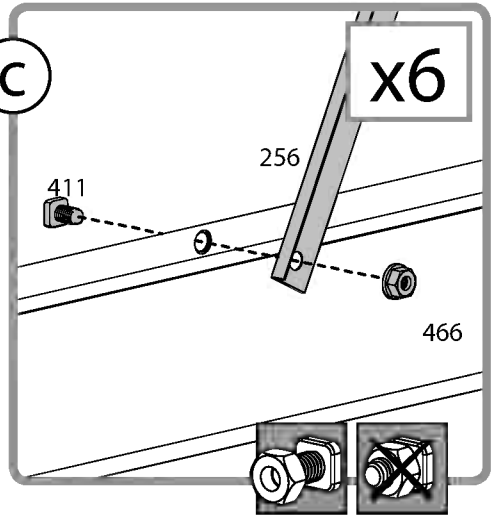
a

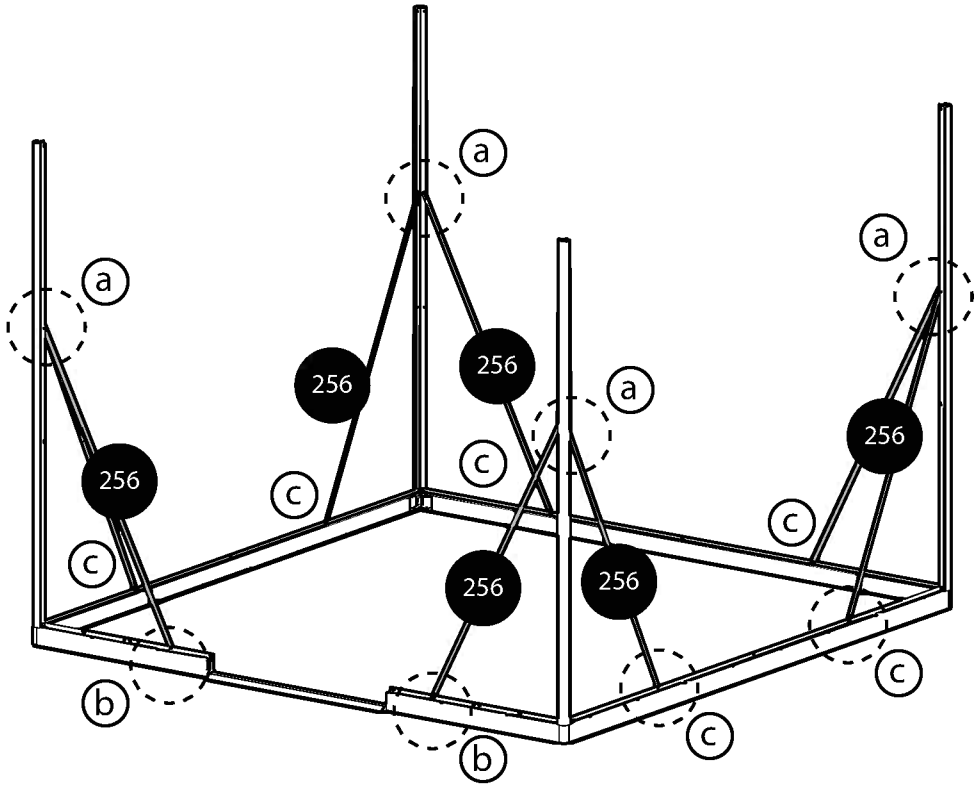


b

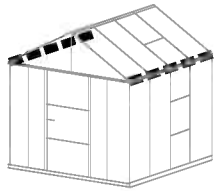


c

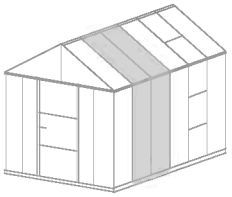




9 For Extension Kit Only

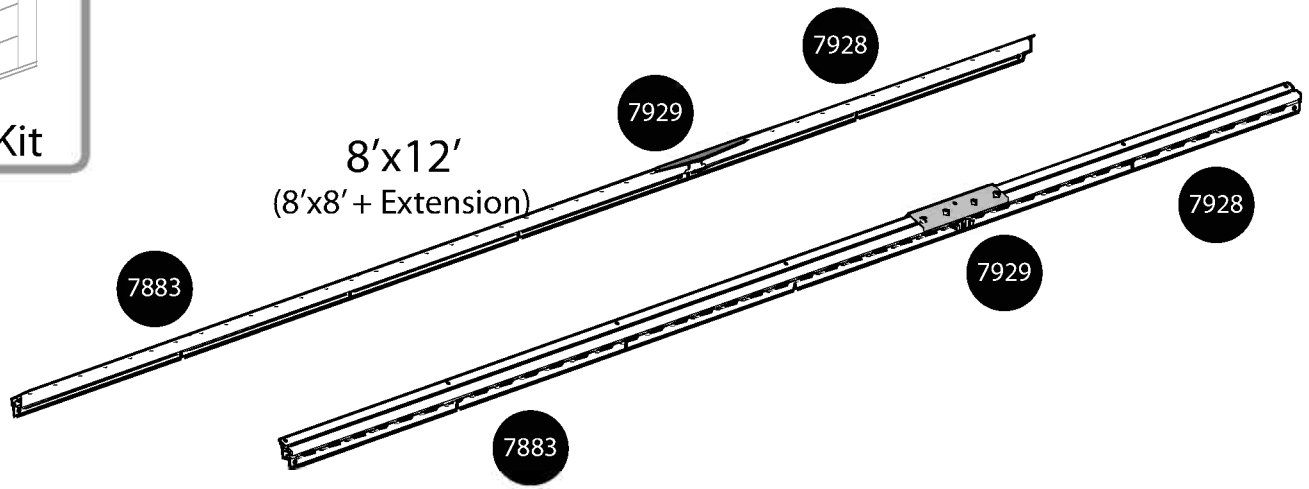


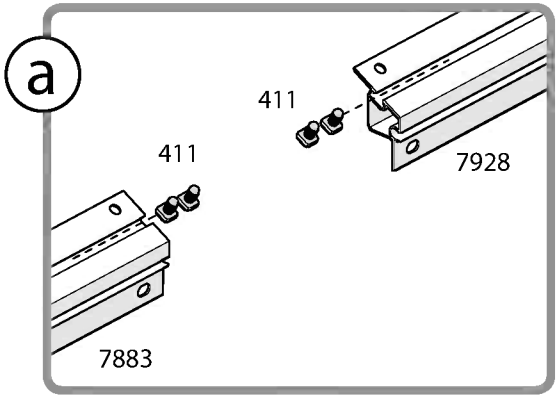
7883	2	7929	2	411	12
7928	2	7944	2	466	12

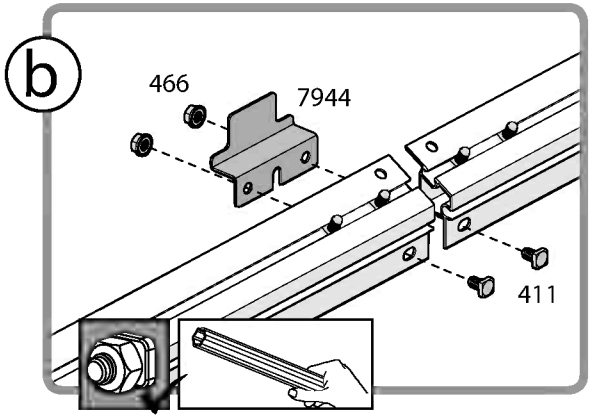


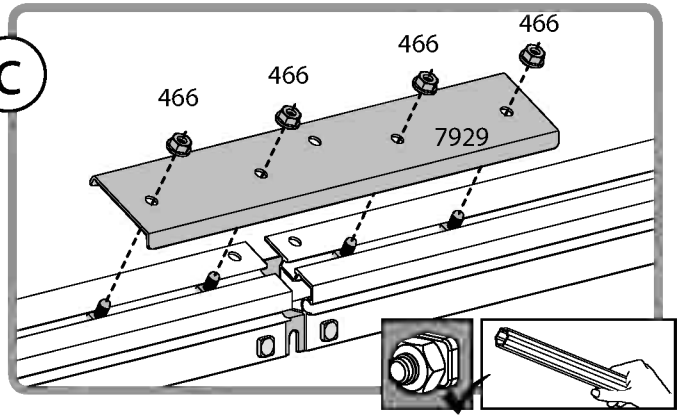
Extension Kit

8'x12'
(8'x8' + Extension)

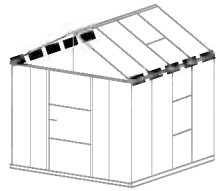


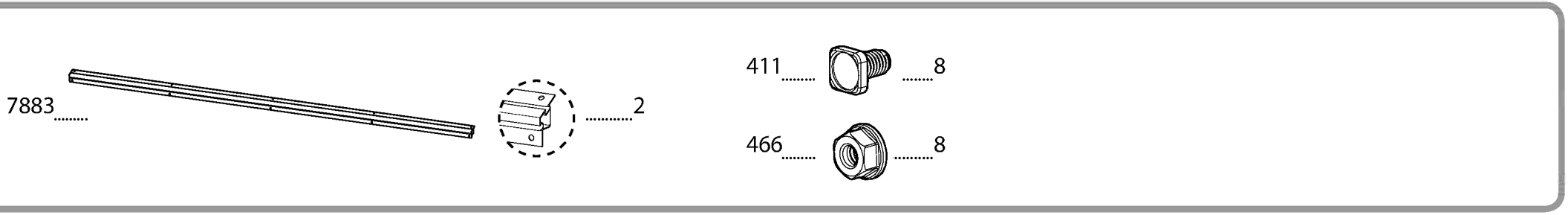


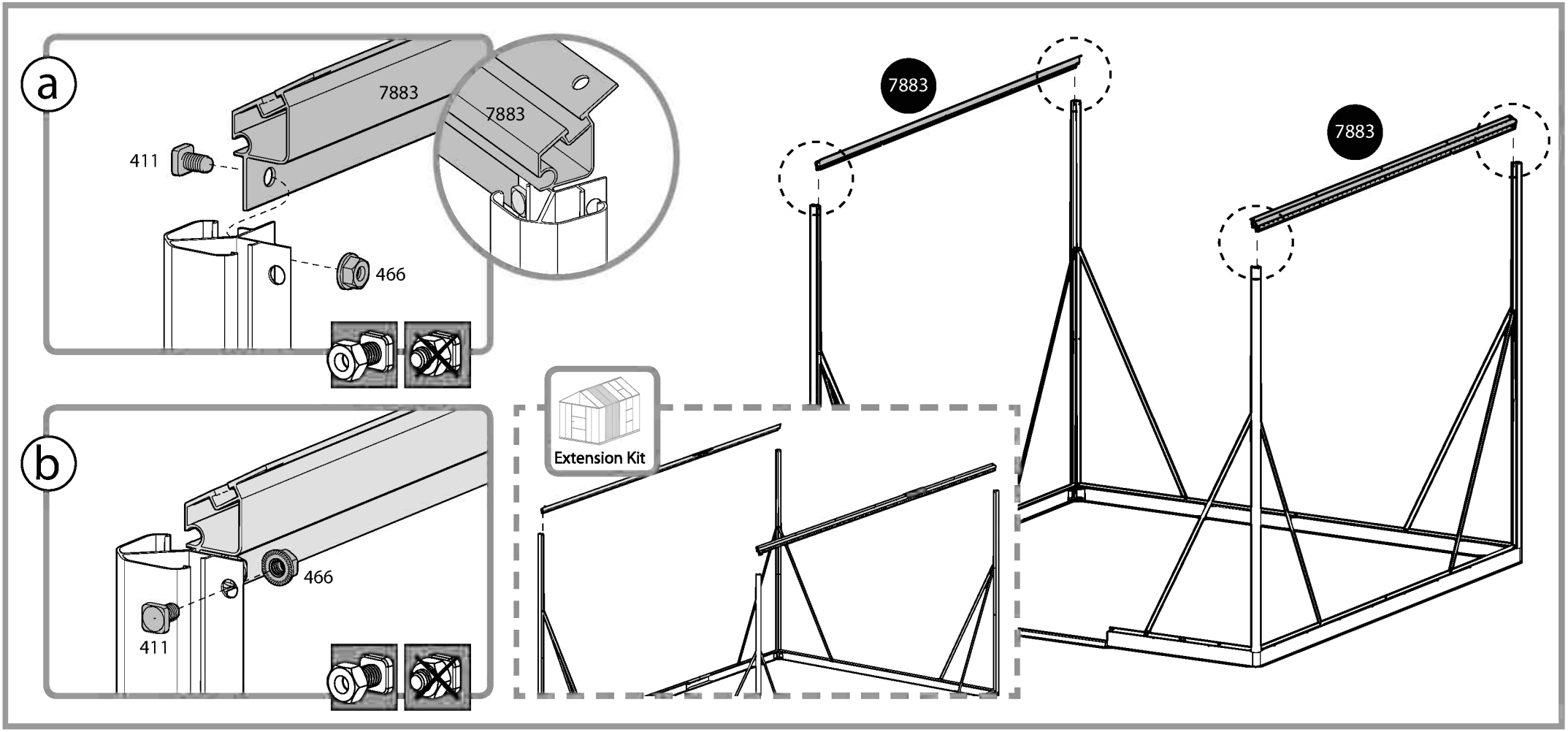


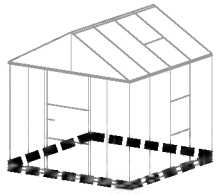


10




7883
2
411
8
466
8


a
7883
7883
411
466
b
466
411
Extension Kit
7883
7883



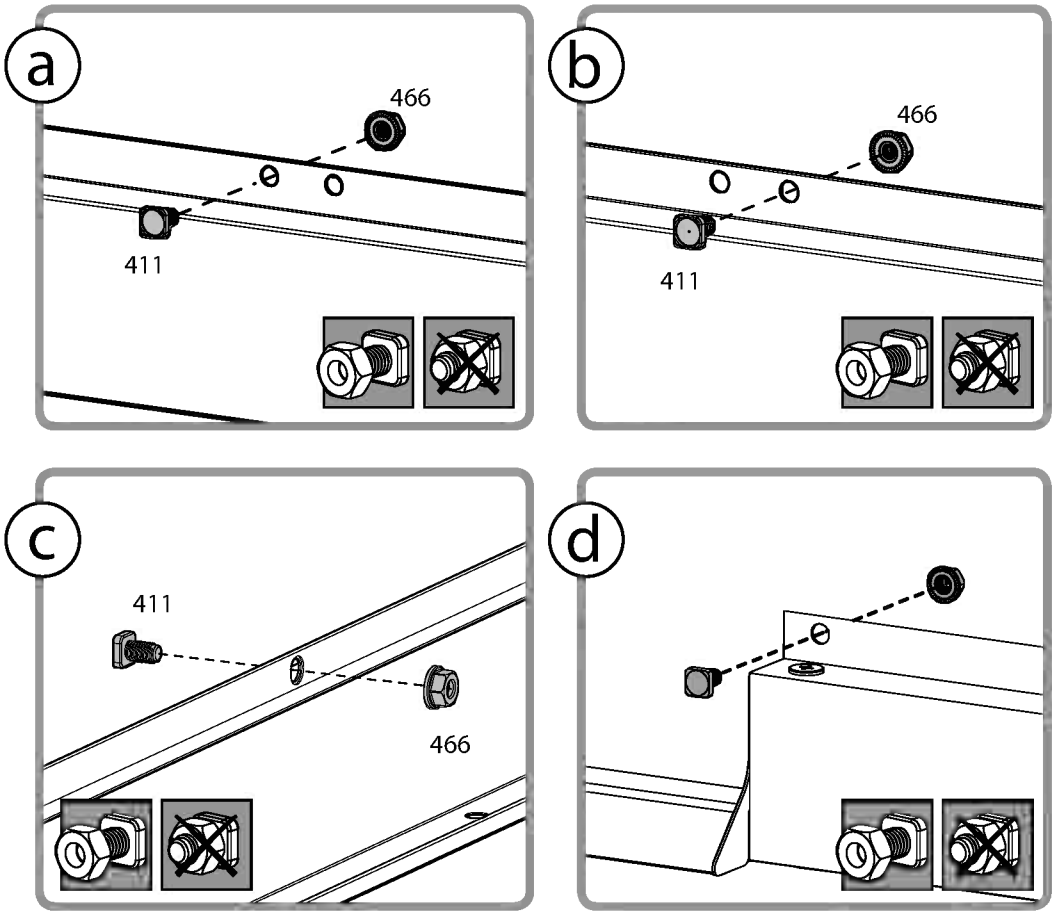
411 .....  7

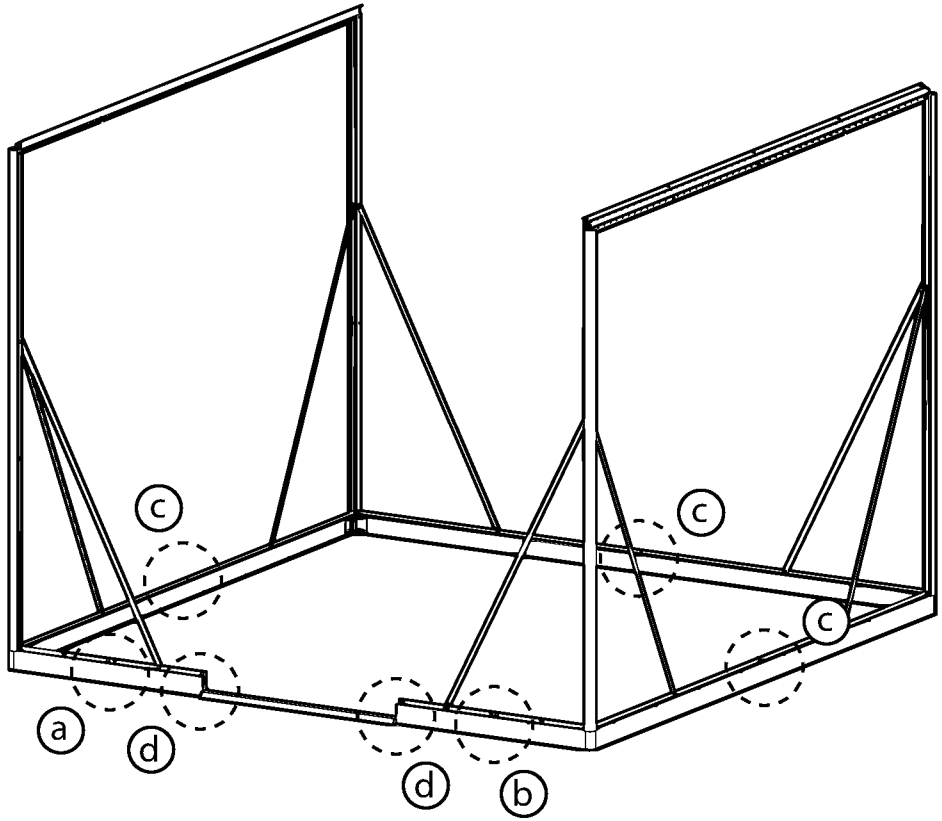
466 .....  7



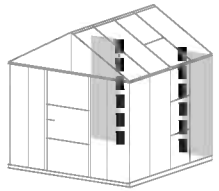
411 ..... +4

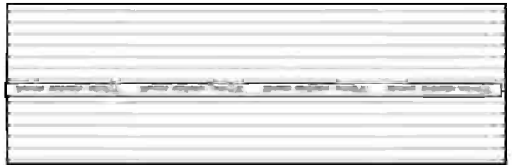
466 ..... +4





12

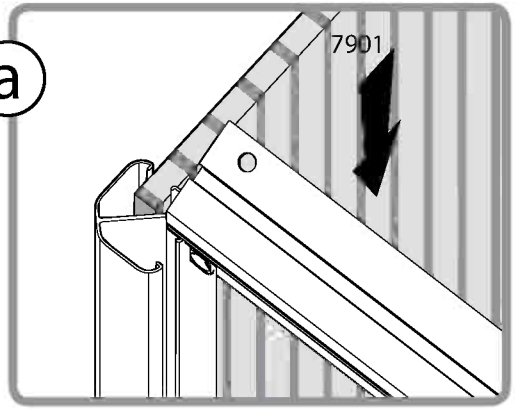


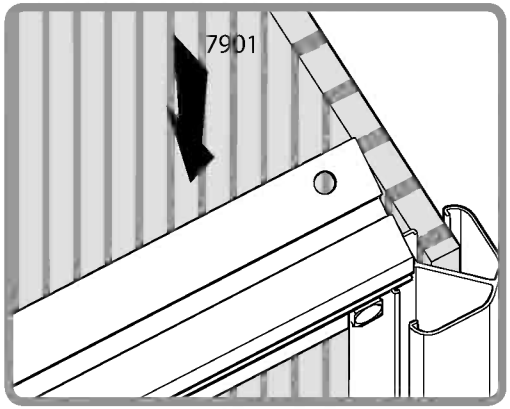
7901 .....  2

7892 .....  2

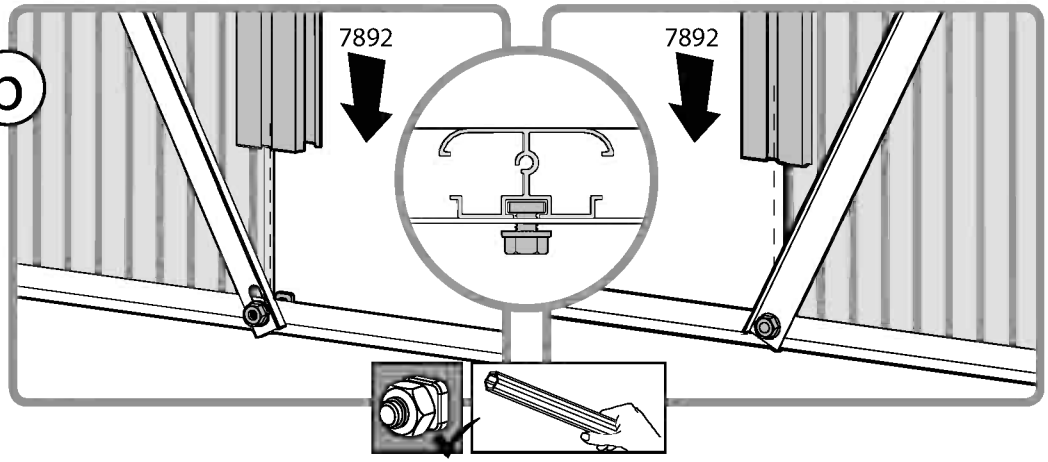


a

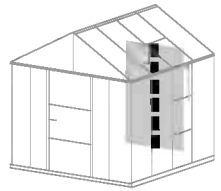


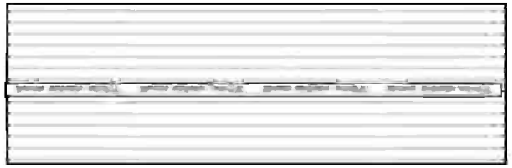


b



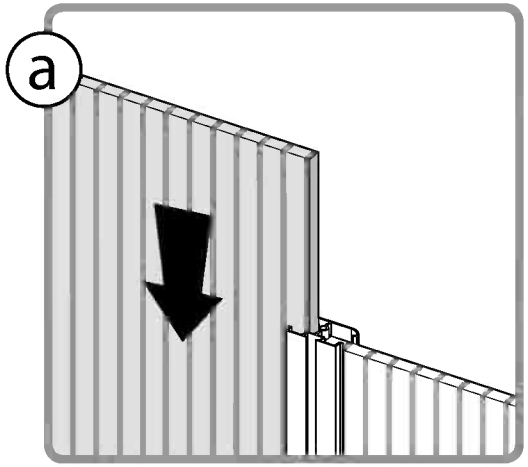
13

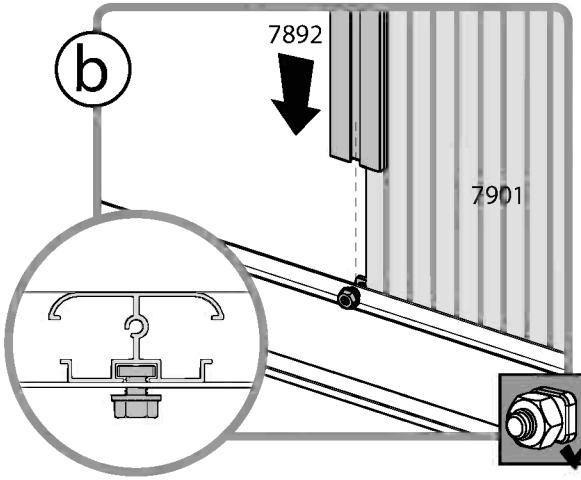


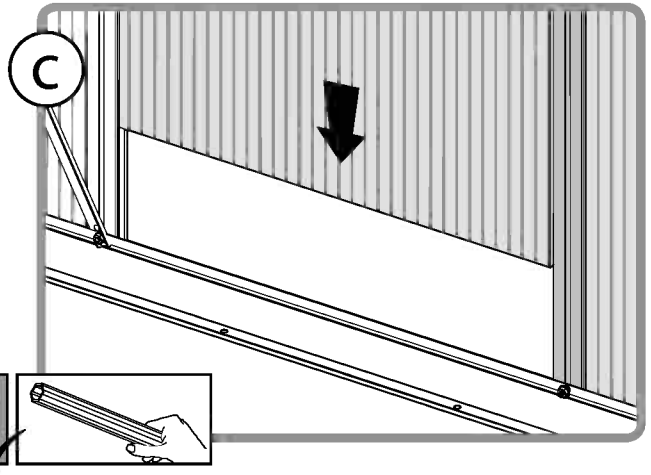
7901 .....  2

7892 .....  1

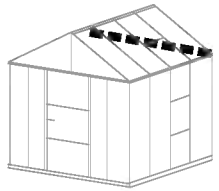








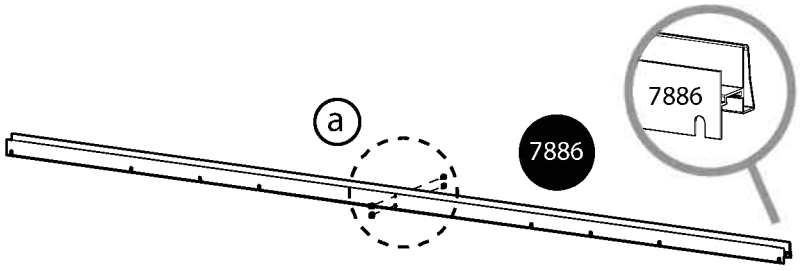
14

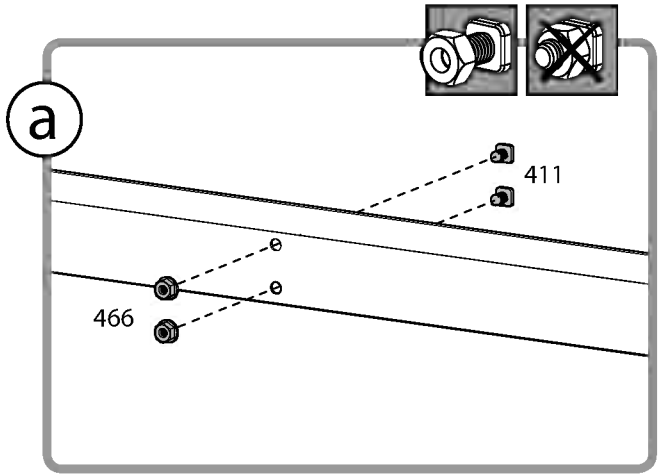


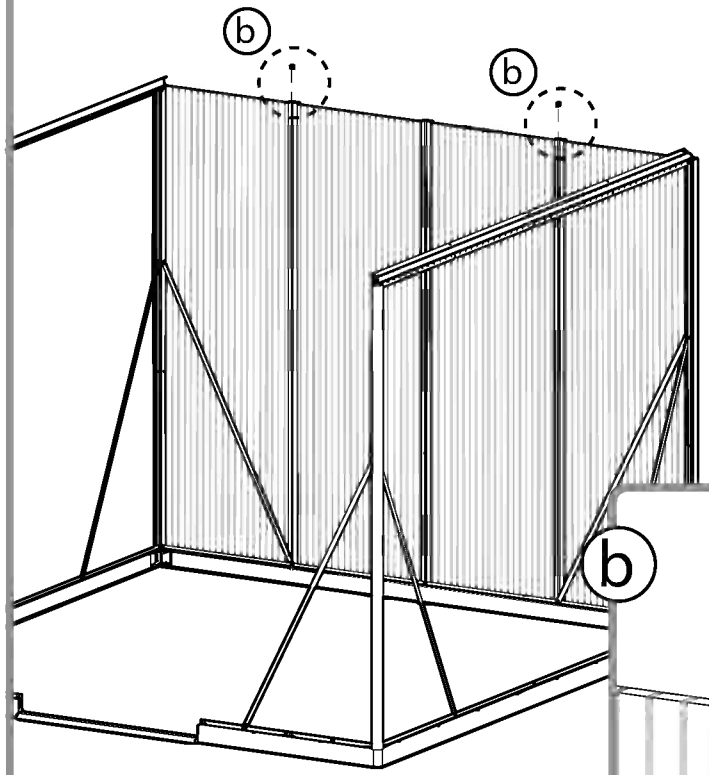
7886 .....  1

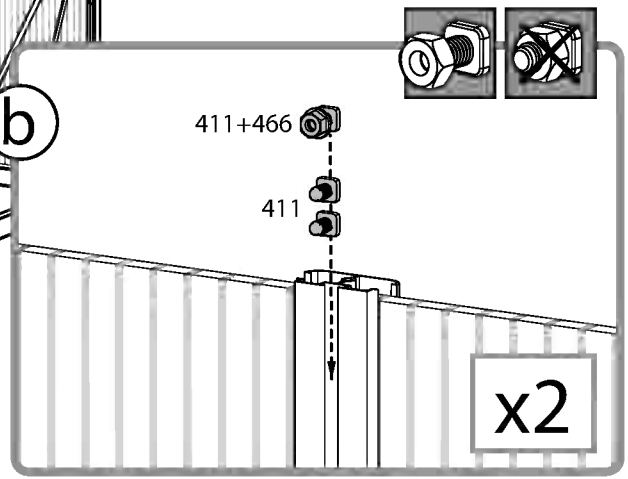
411 .....  8

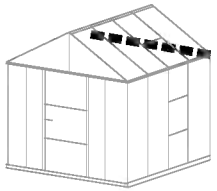
466 .....  4

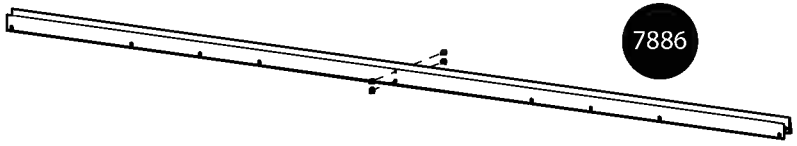


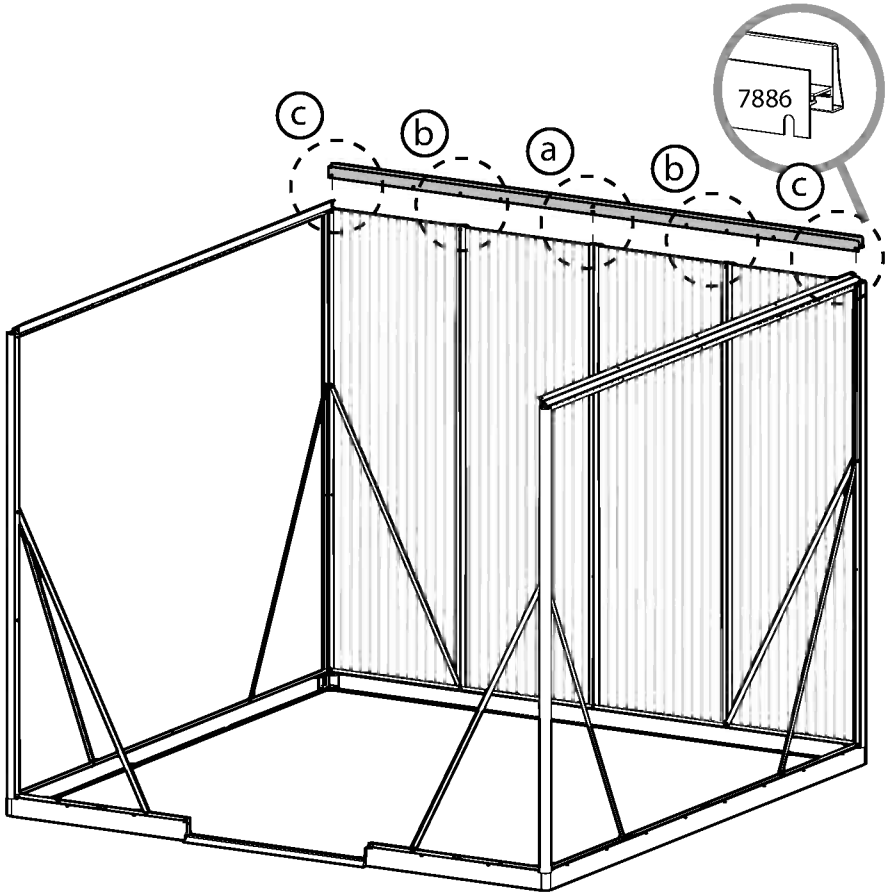


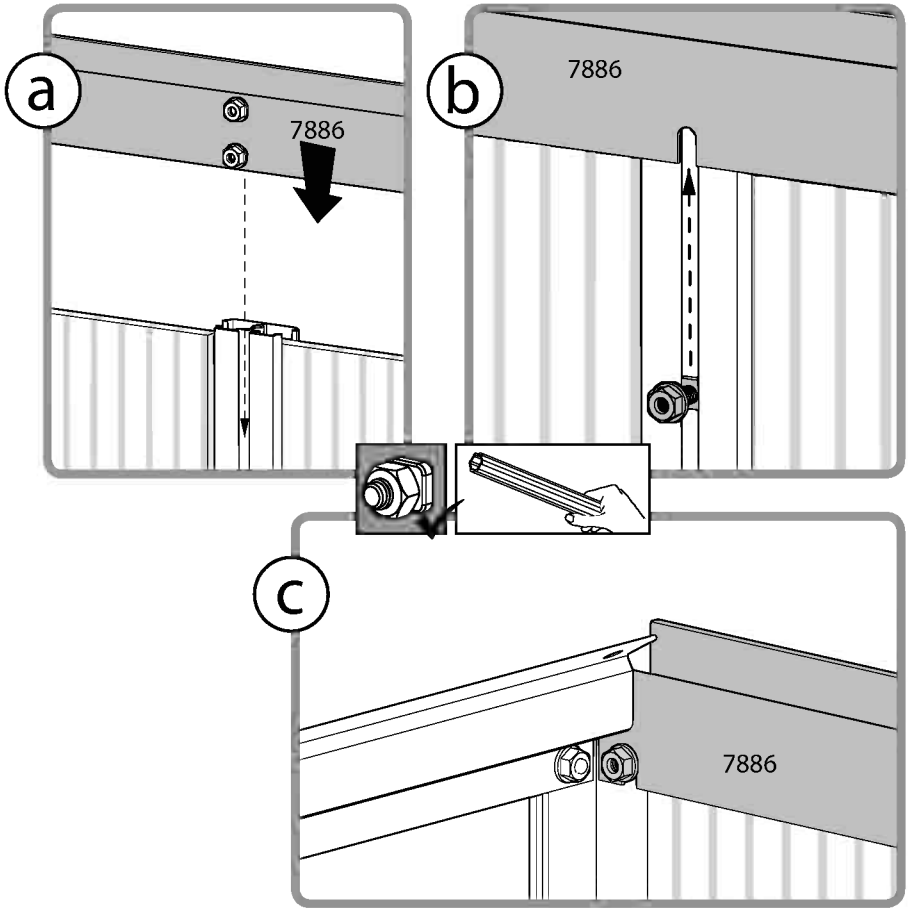


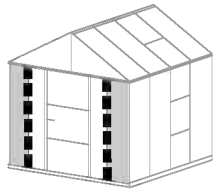





7886

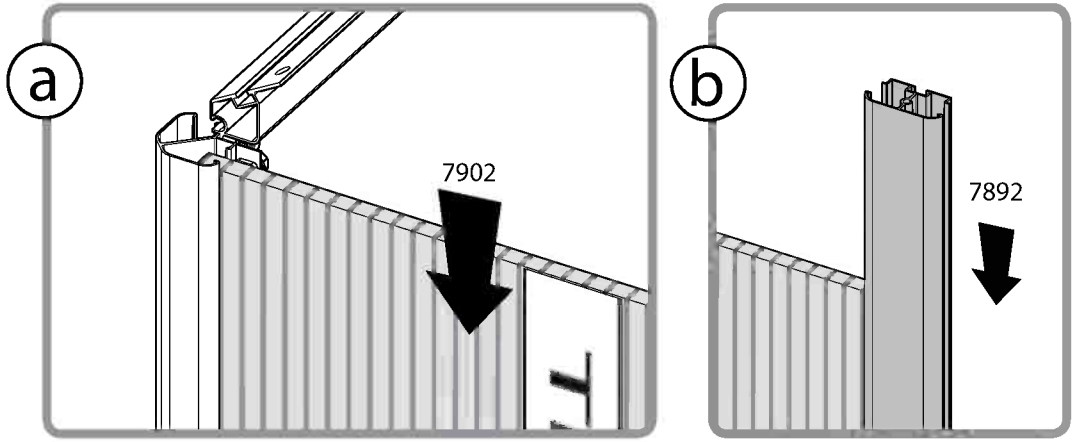

7886
c
b
a
b
c

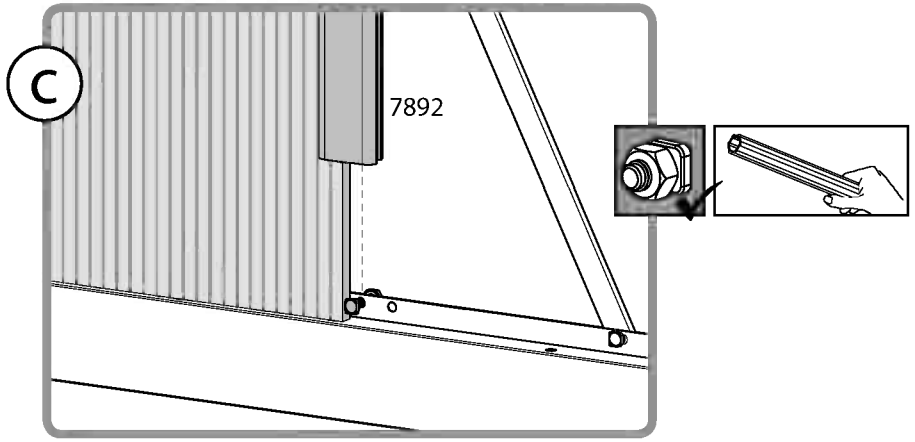

a
7886
b
7886
c
7886

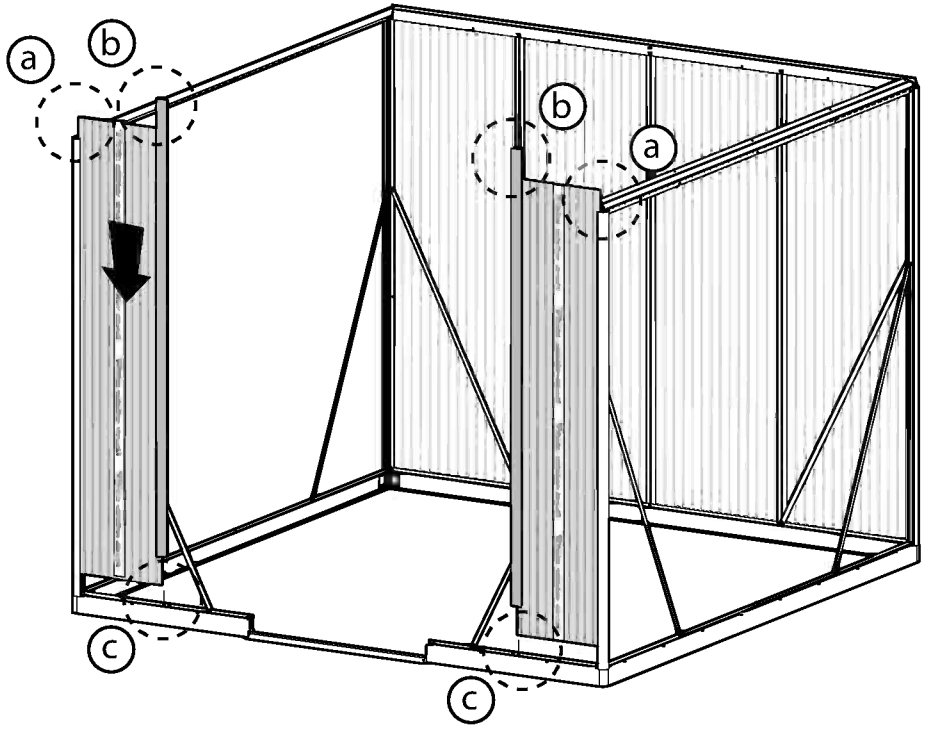


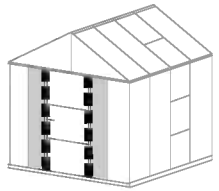
7902 .....  2

7892 .....  2

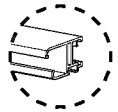


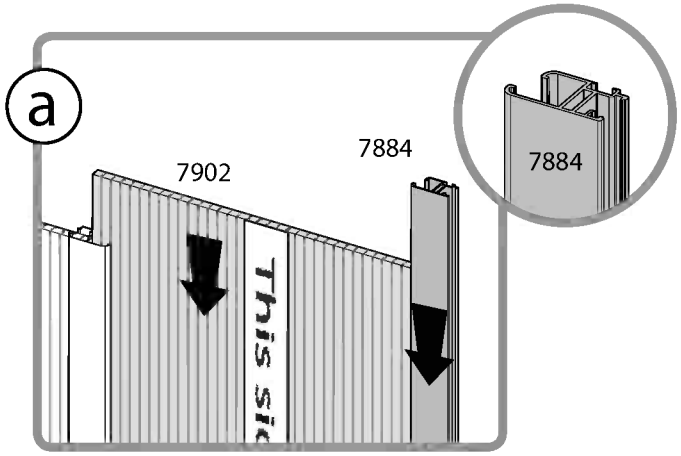


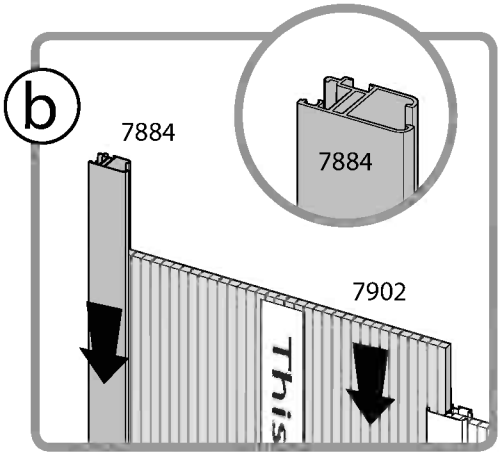


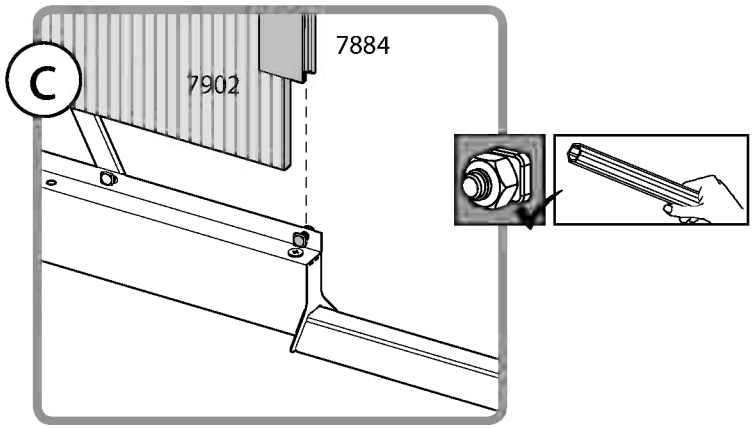


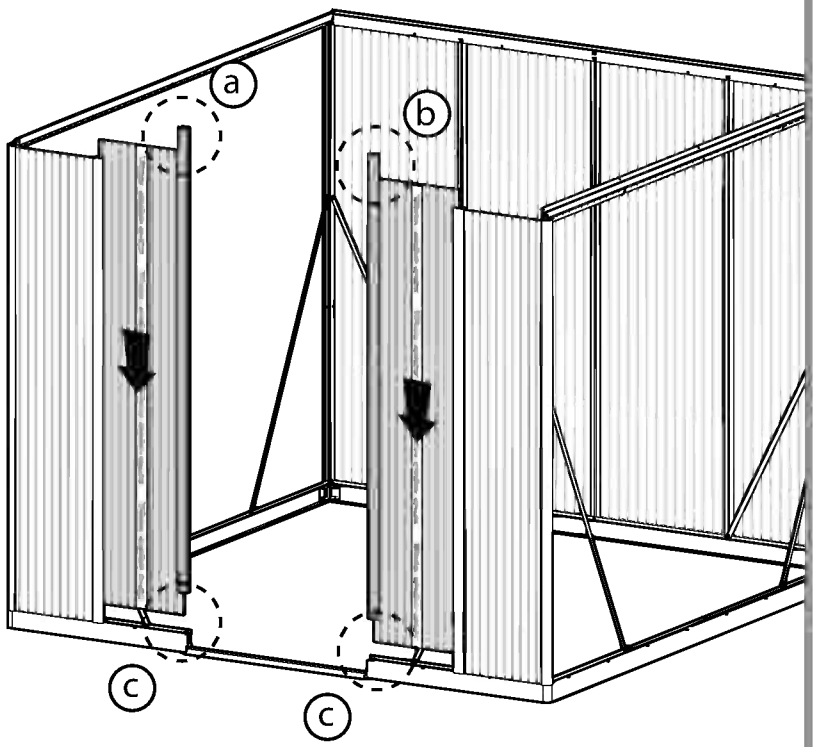
7902 .....  2

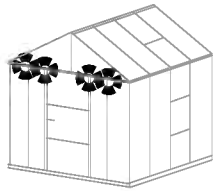
7884 .....   2


a
7902
7884
7884
This sid


b
7884
7884
7902
This


c
7902
7884


a
b
c
c



411 8

466 4

a

x2

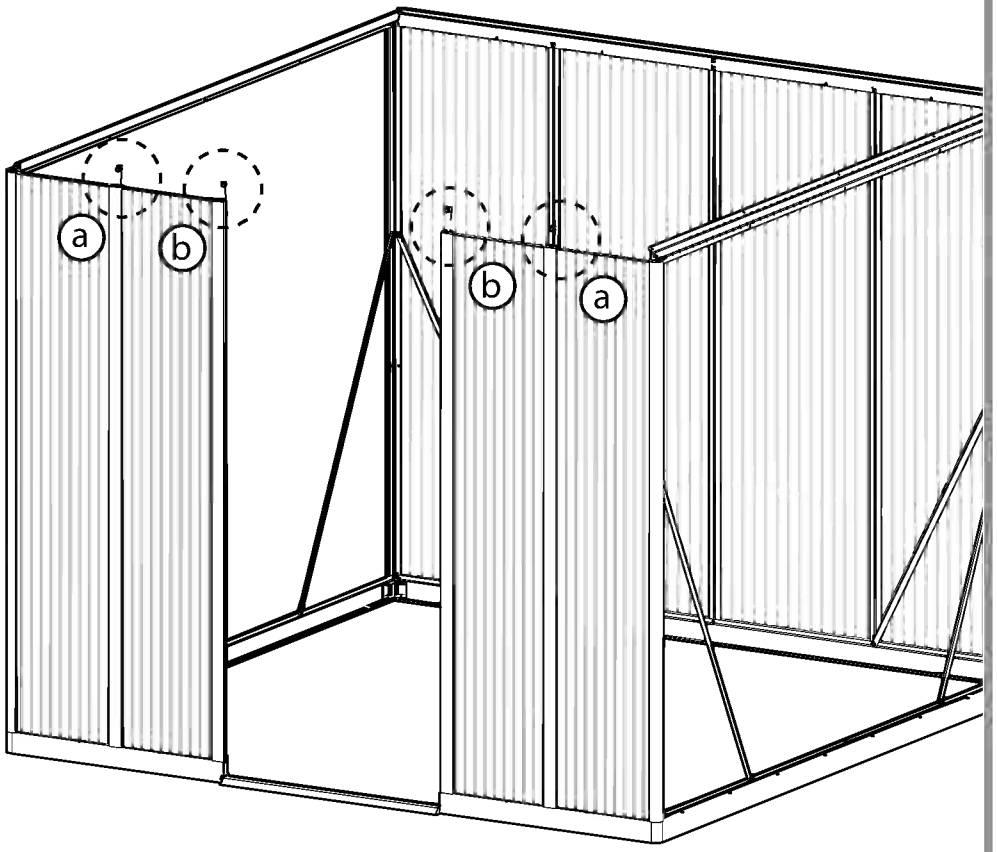
411+466

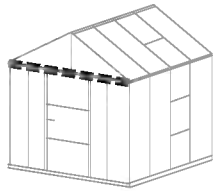
411

b

411+466

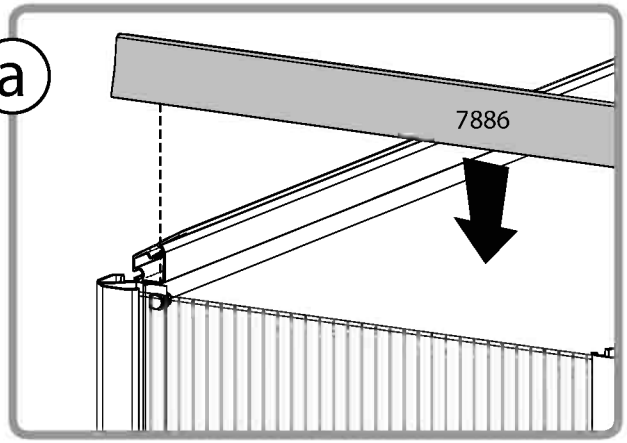
x2



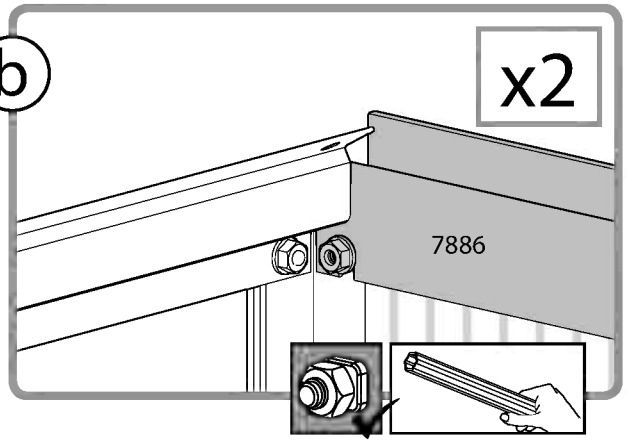


7886 1

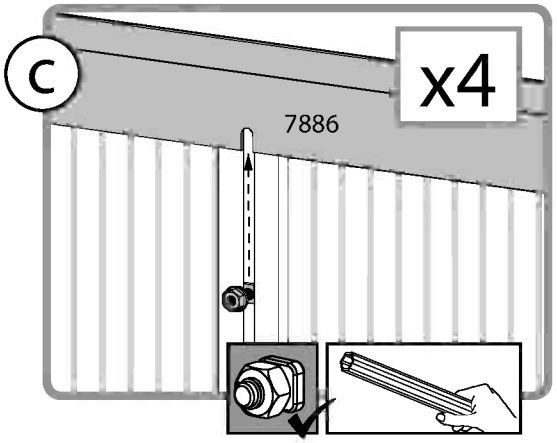
a

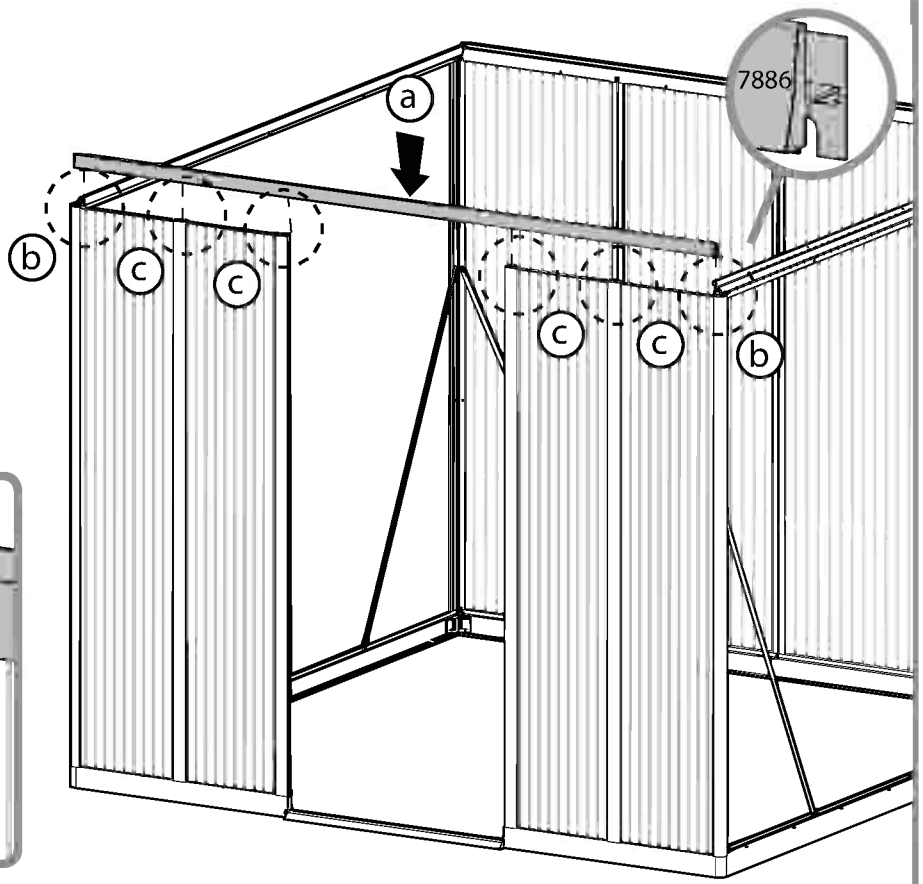


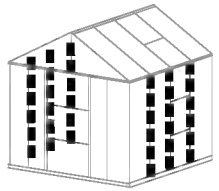
b x2



c x4







7892 .....  6

411 .....  14

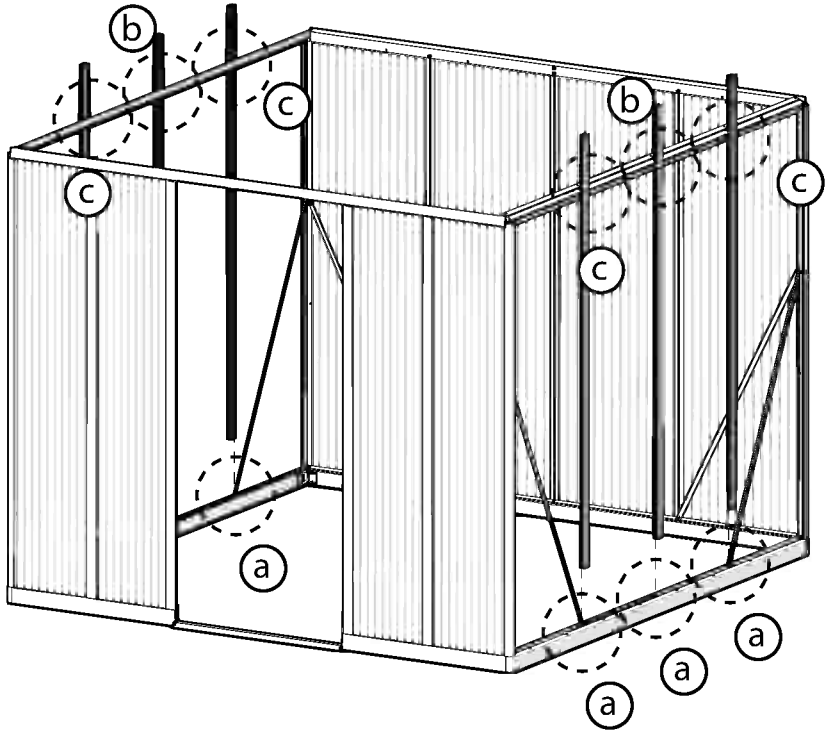
466 .....  6

Extension Kit

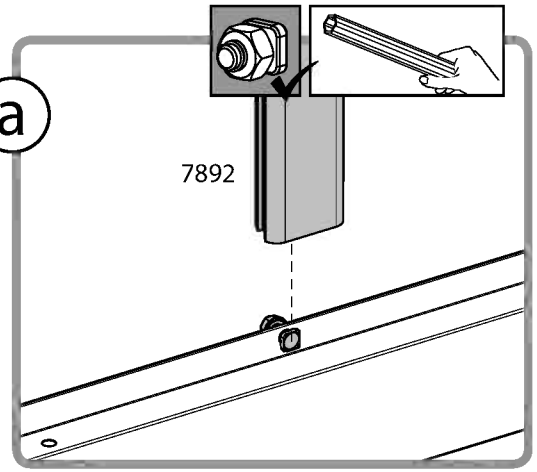
7892 ..... +4

411 ..... +4

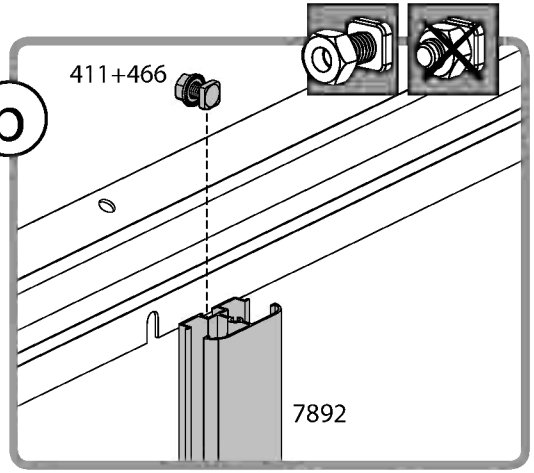
466 ..... +4

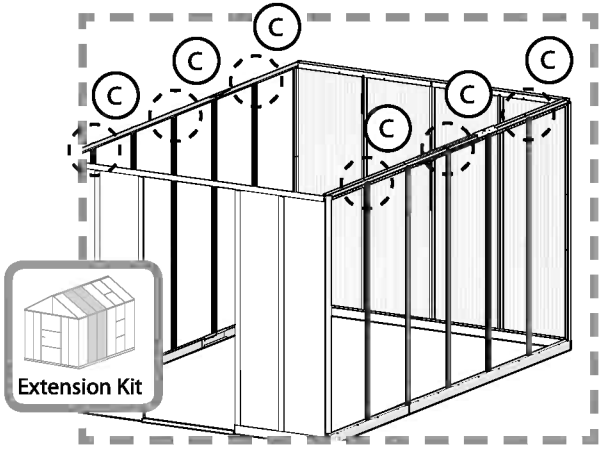


a

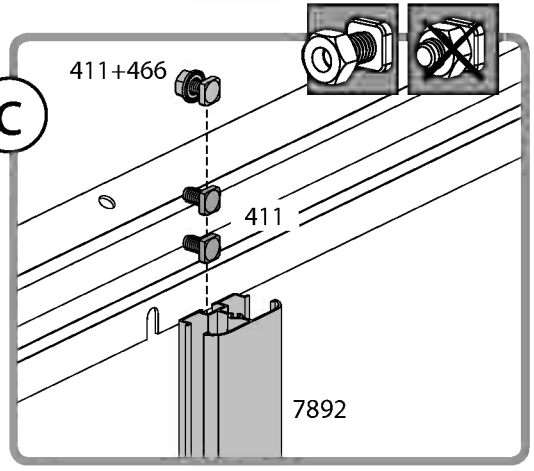


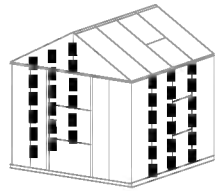
b

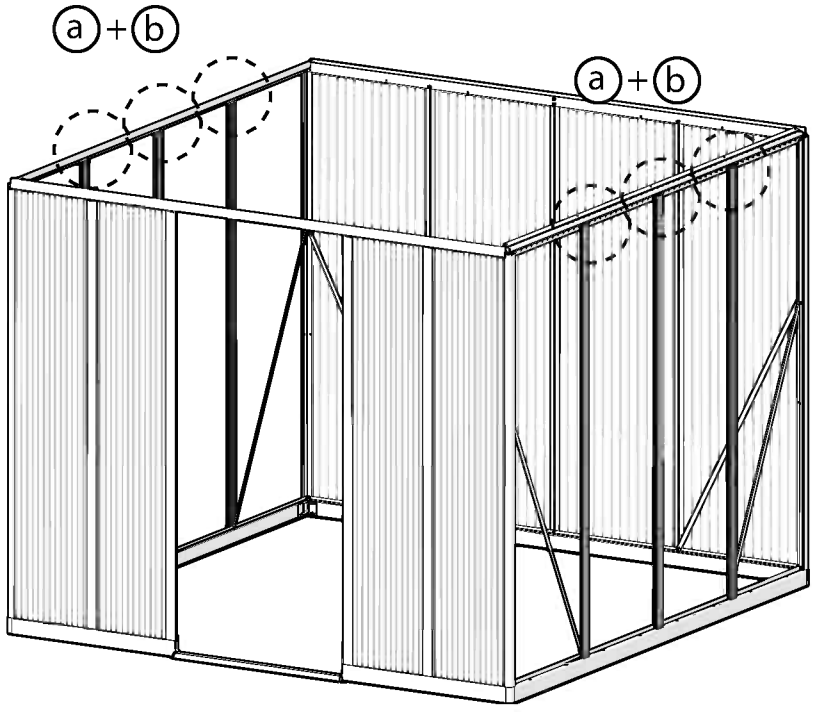


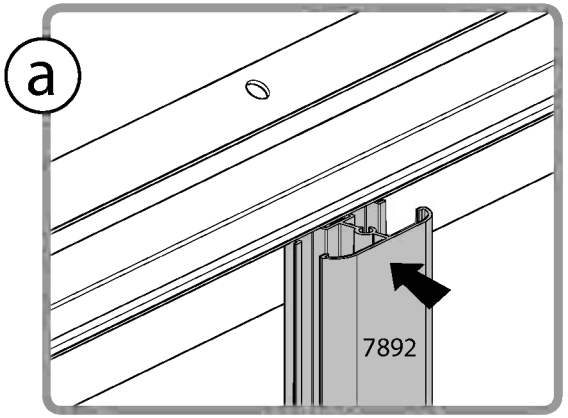


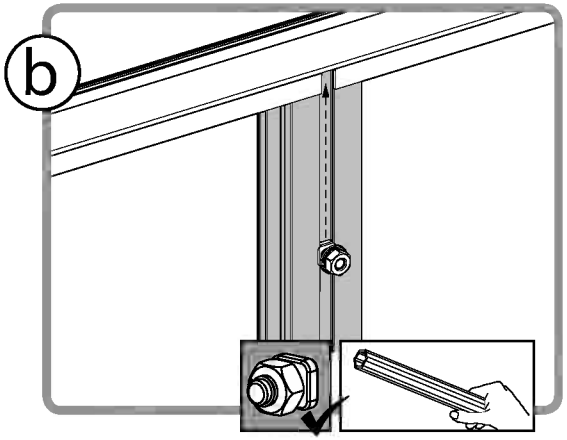
c

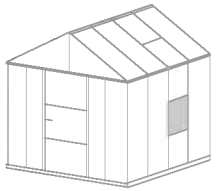


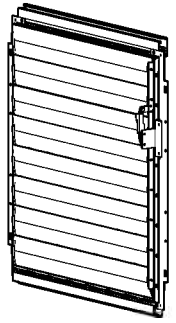


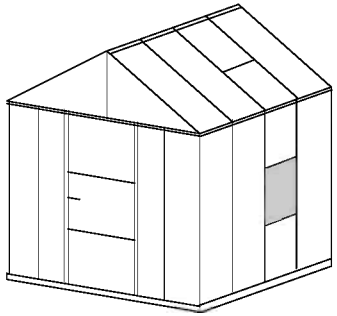
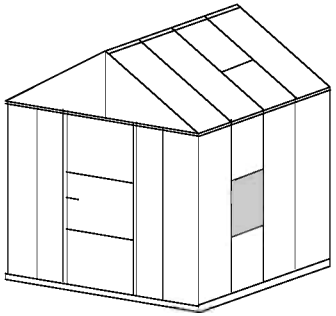
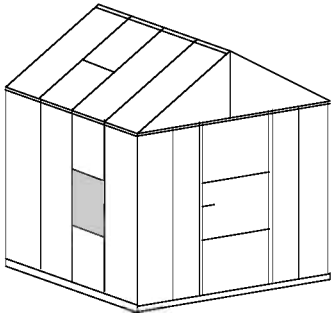
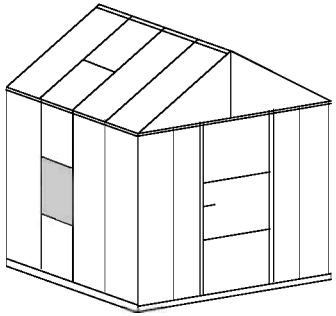

a + b
a + b


a
7892

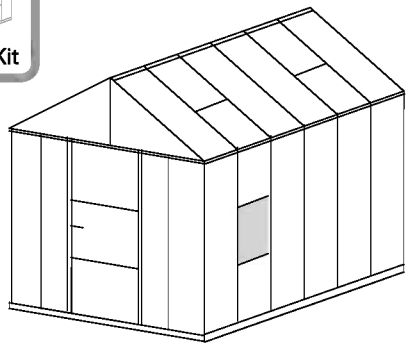
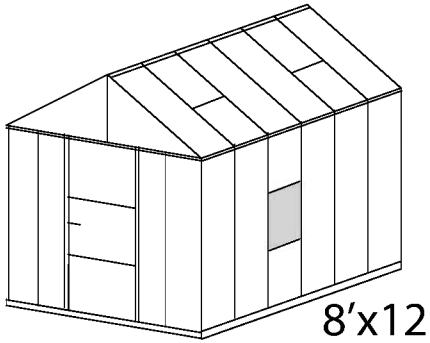
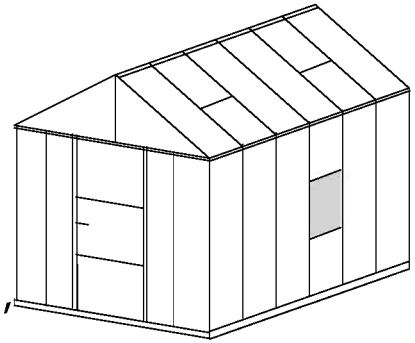
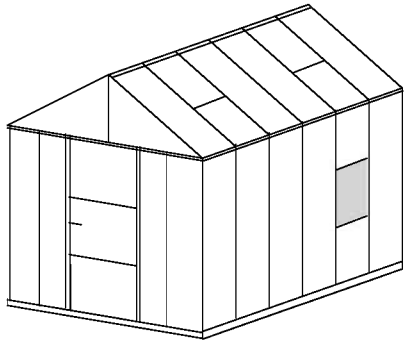

b



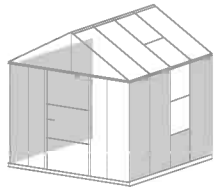
7943 .....  1

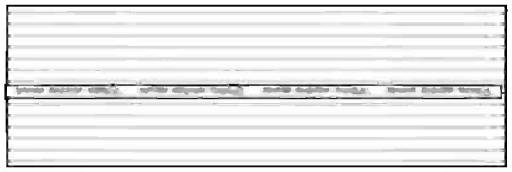





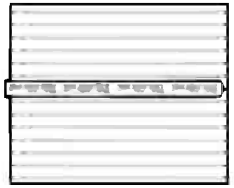

Extension Kit

8′x12′
(8′x8′ + Extension)



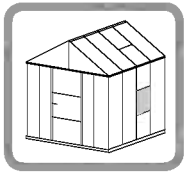
7901 .....  7

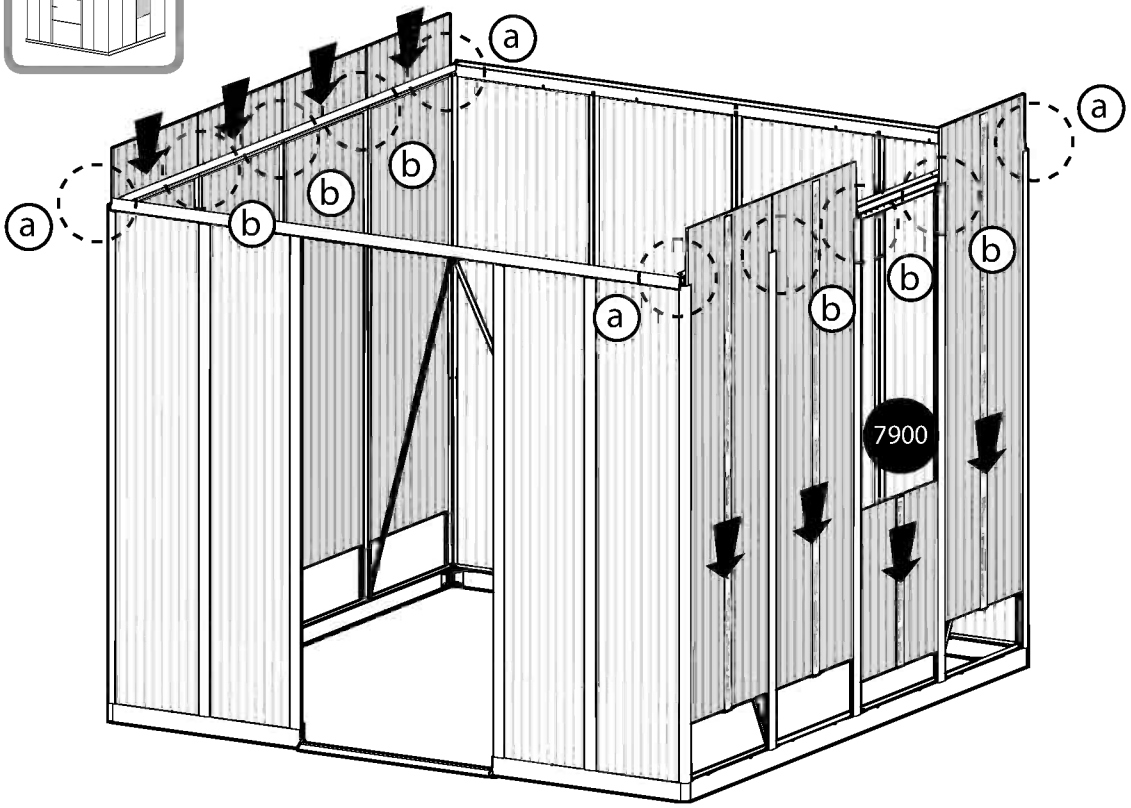
7900 .....  1

59 x 74 cm
23"x29"

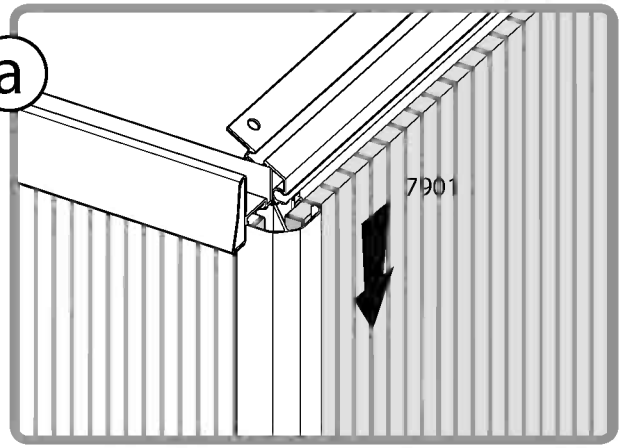


7901 ..... +4

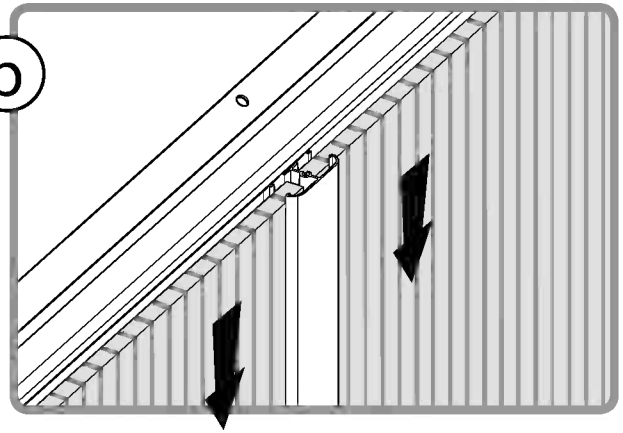


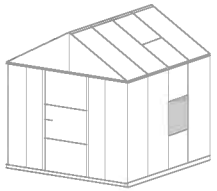


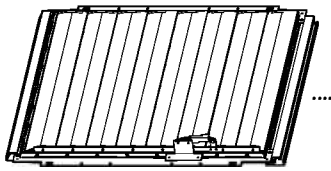
a



b

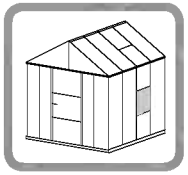


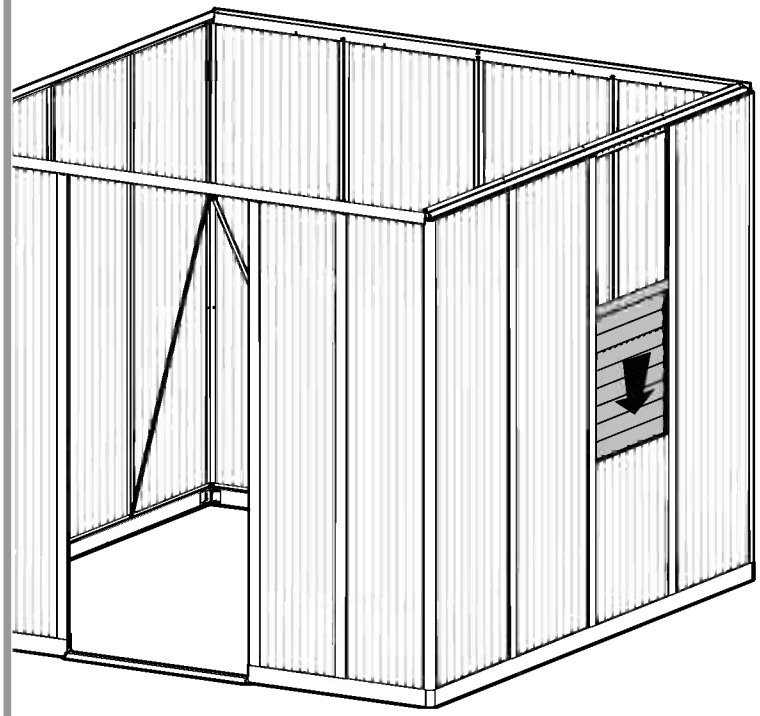


7943 .....  1

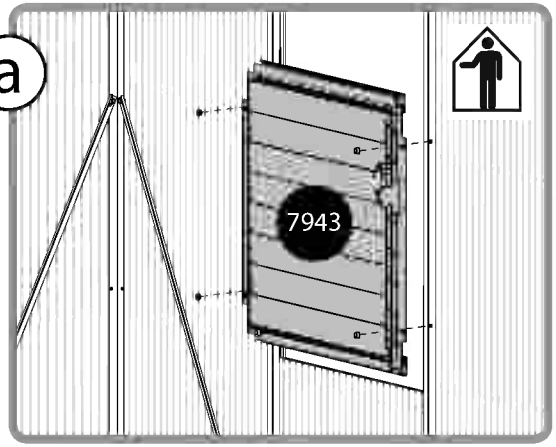
461 .....  4

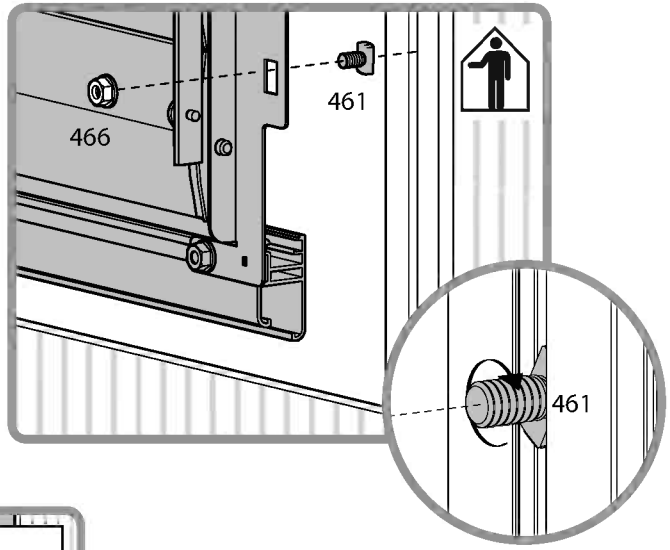
466 .....  4



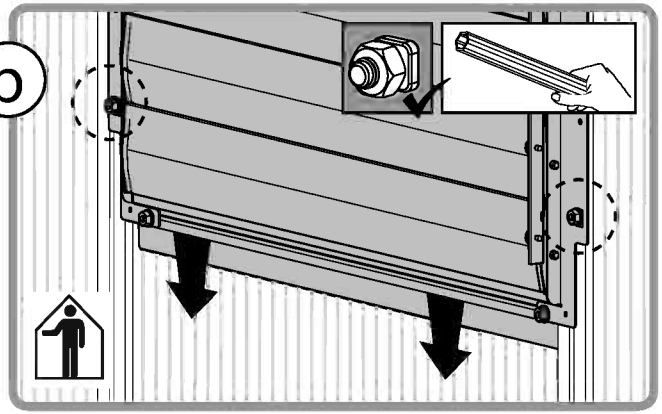


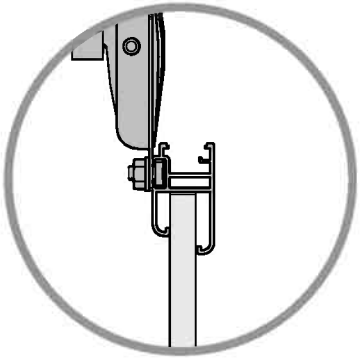
a

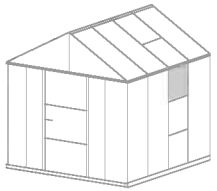


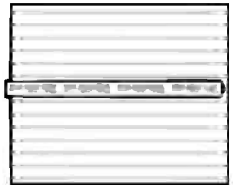


b

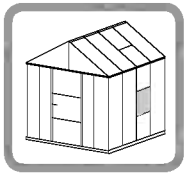


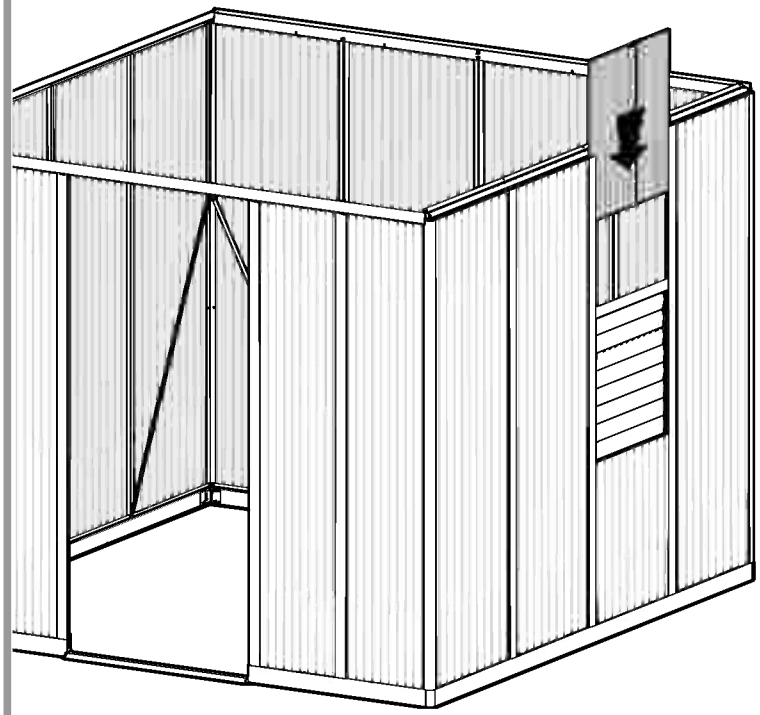


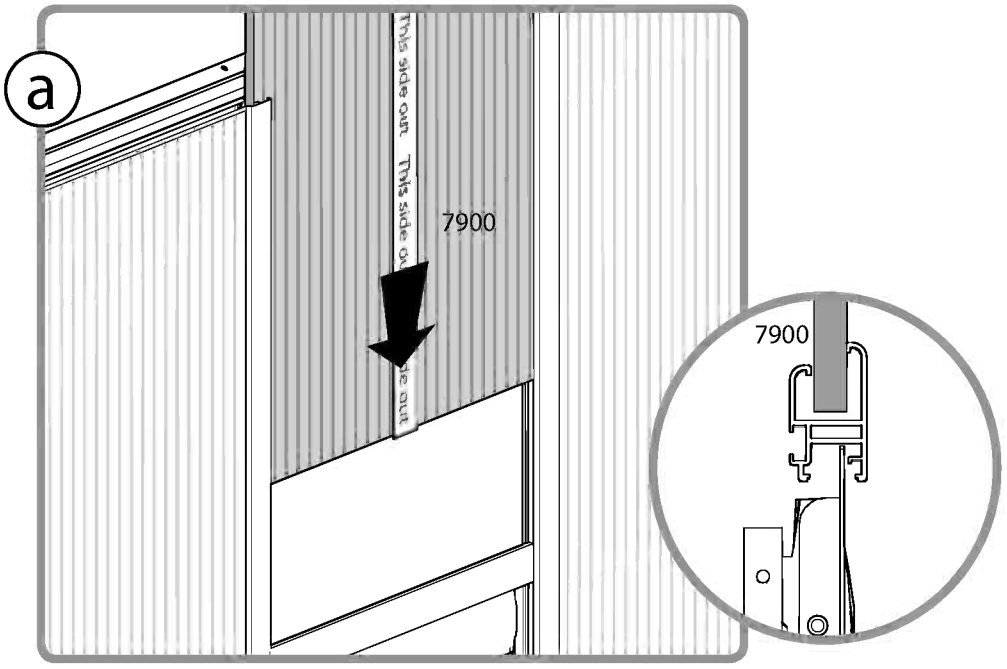


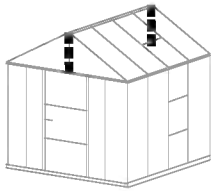
7900 .....  1

59 x 74 cm
23"x29"





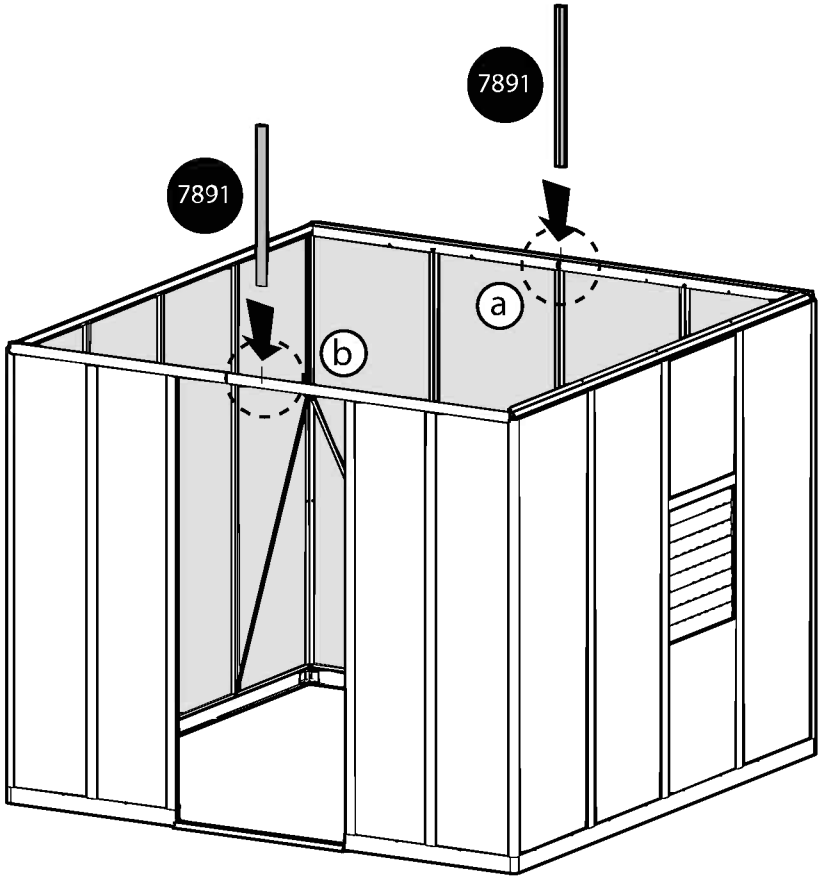




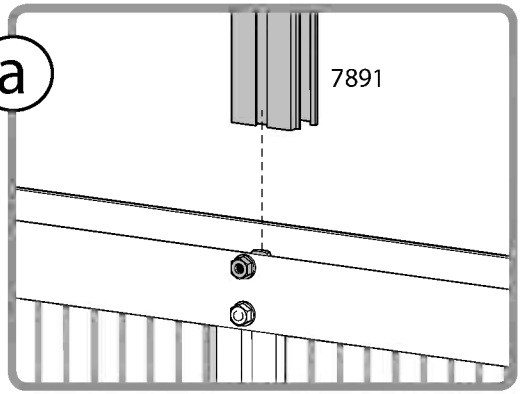
7891 .....   2

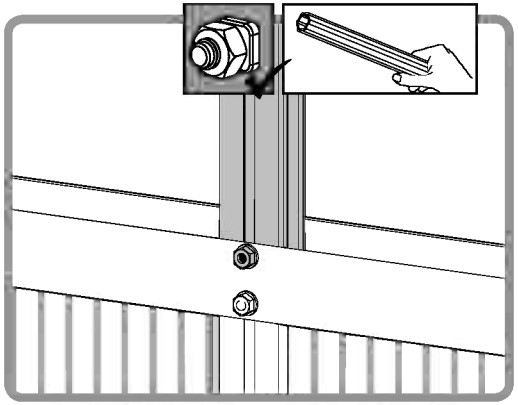
411 .....  1

466 .....  1

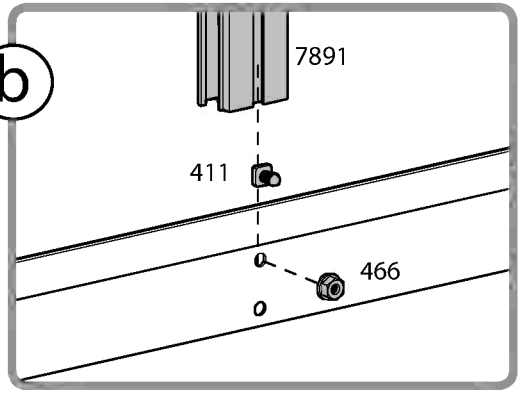


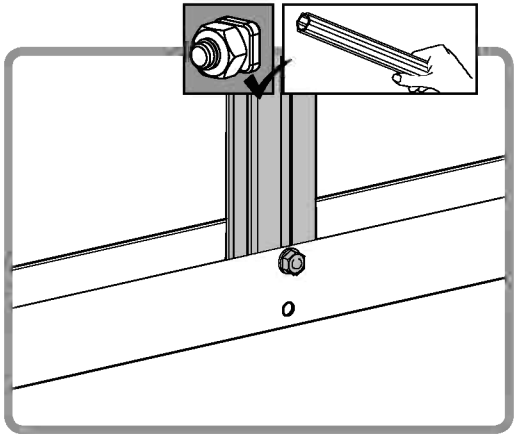
a

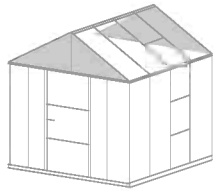


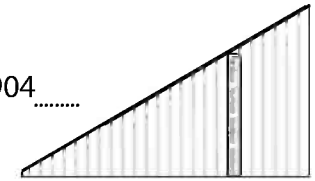


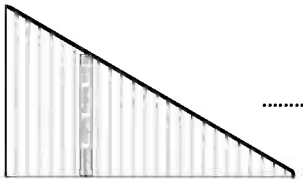
b

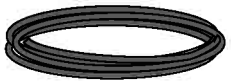


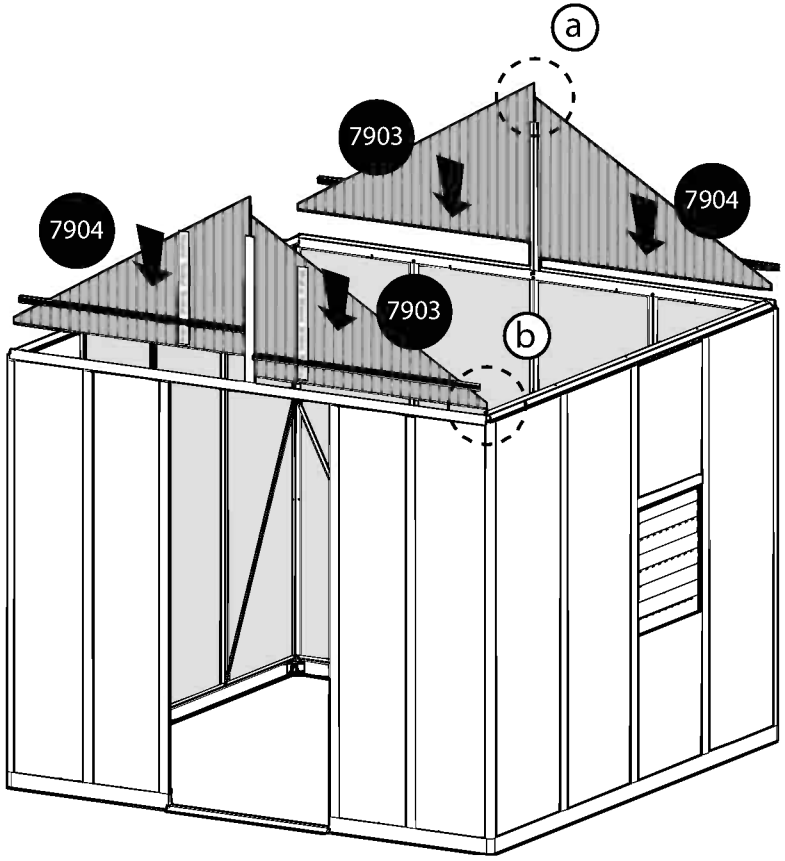


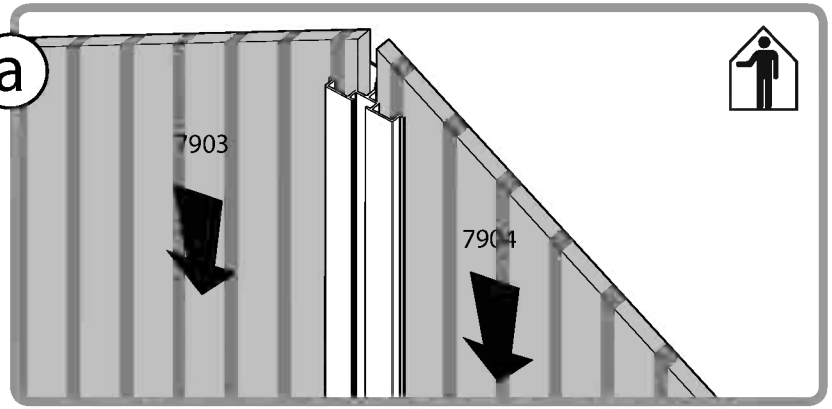


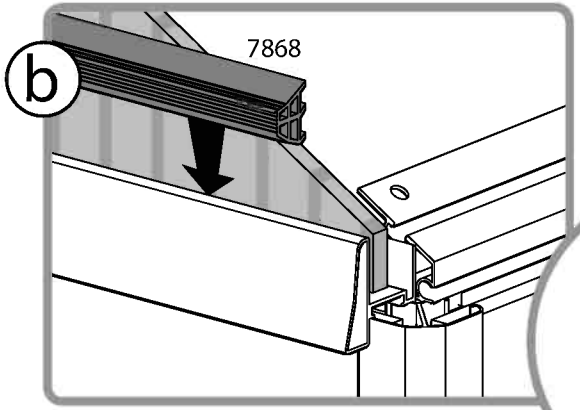
7904 .....  2

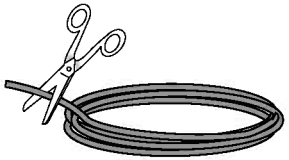
7903 .....  2

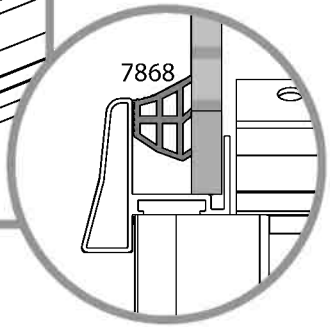
7868 .....   1

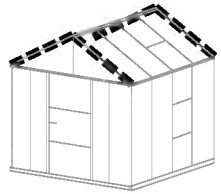








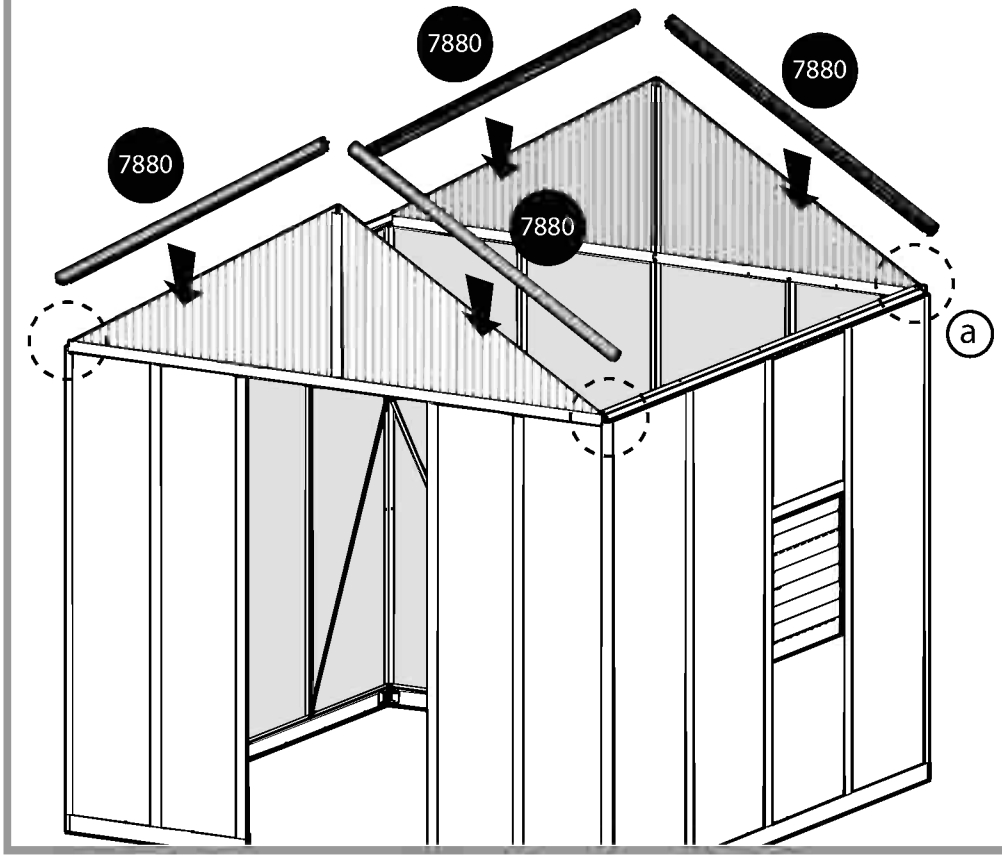


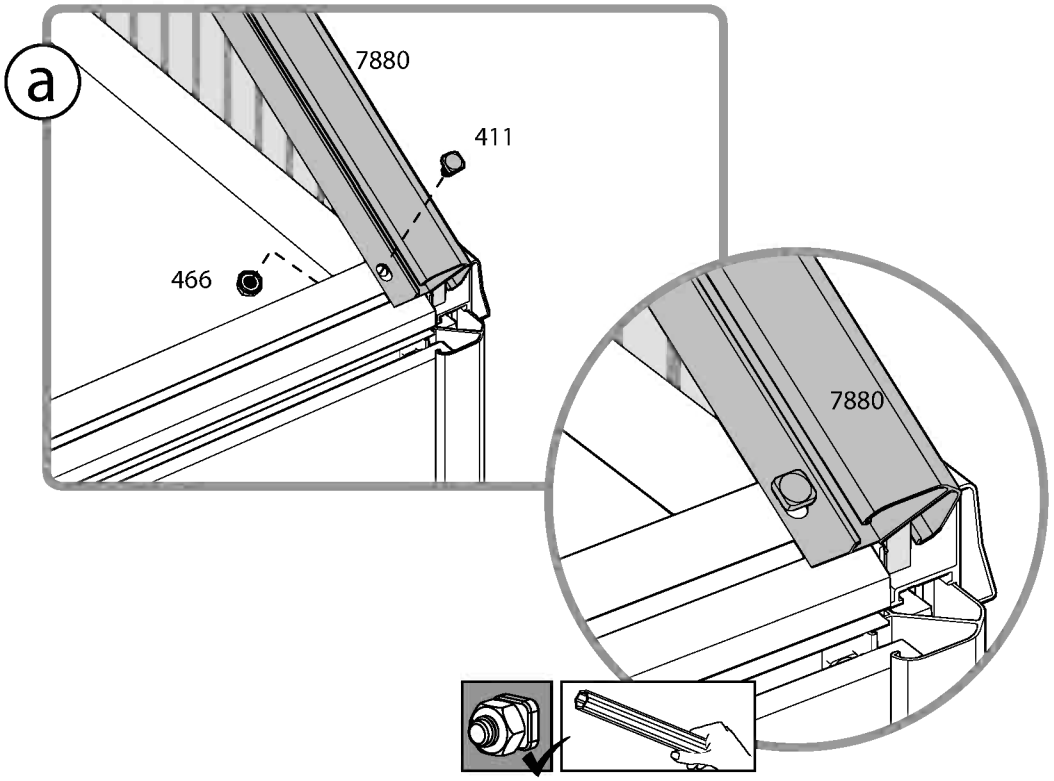


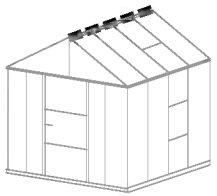
7880 1

411 4

466 4



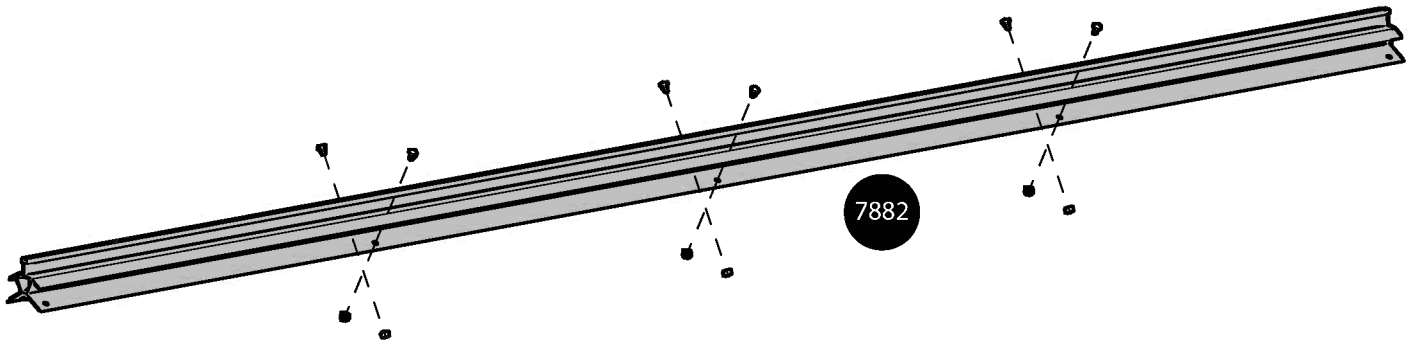


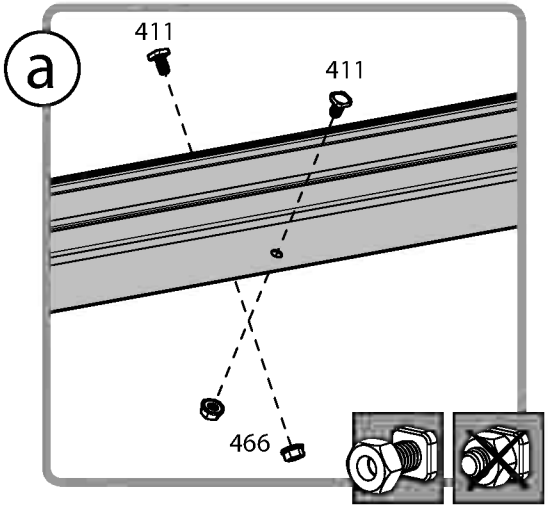


7882 .....   4

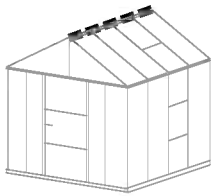
411 .....  6

466 .....  6

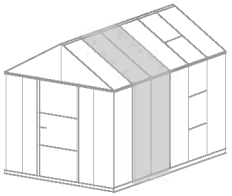




30 For Extension Kit Only

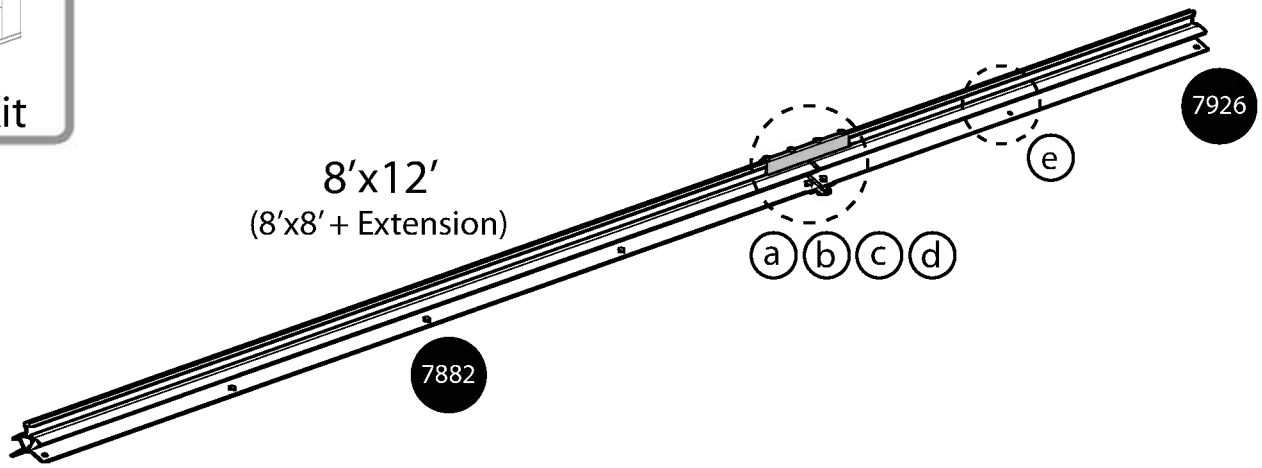


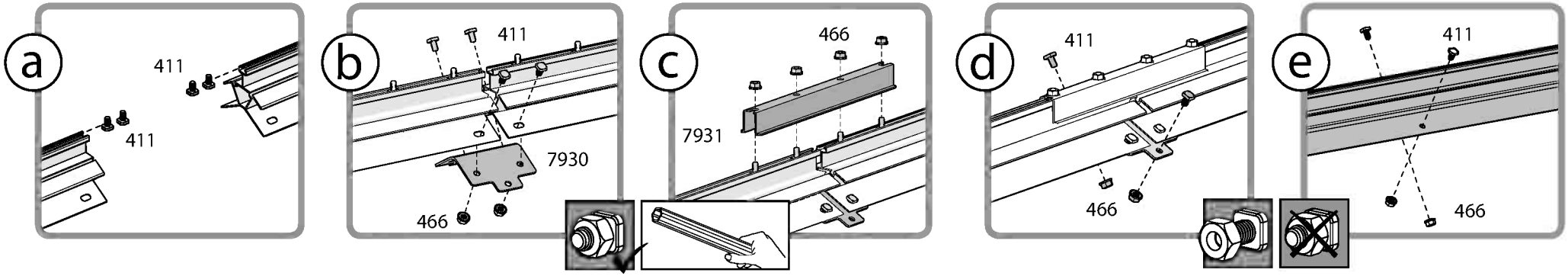
7926	1		7930	1	
7882	1		7931	1	
411	12		466	12	

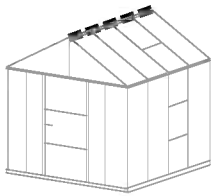


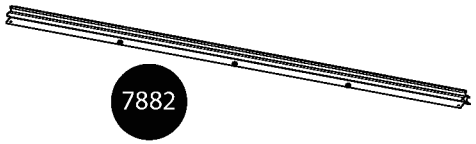
Extension Kit

8′x12′
(8′x8′ + Extension)



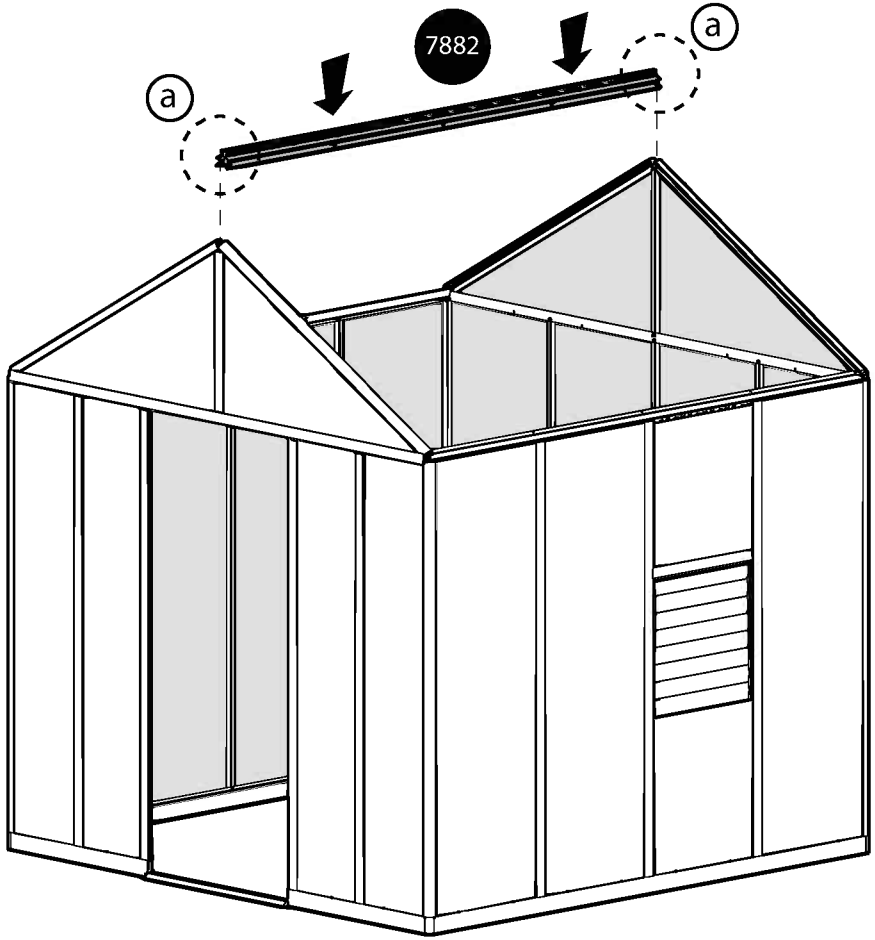


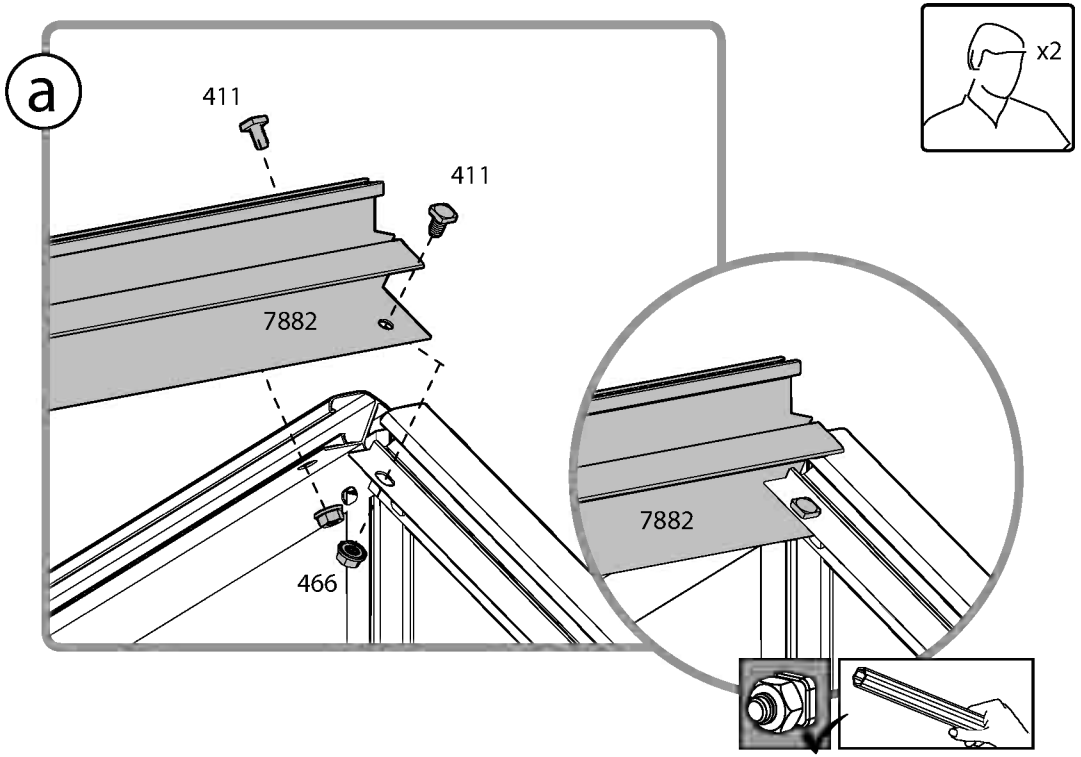


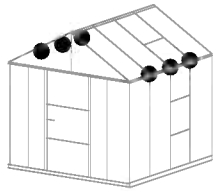


411 .....  4

466 .....  4







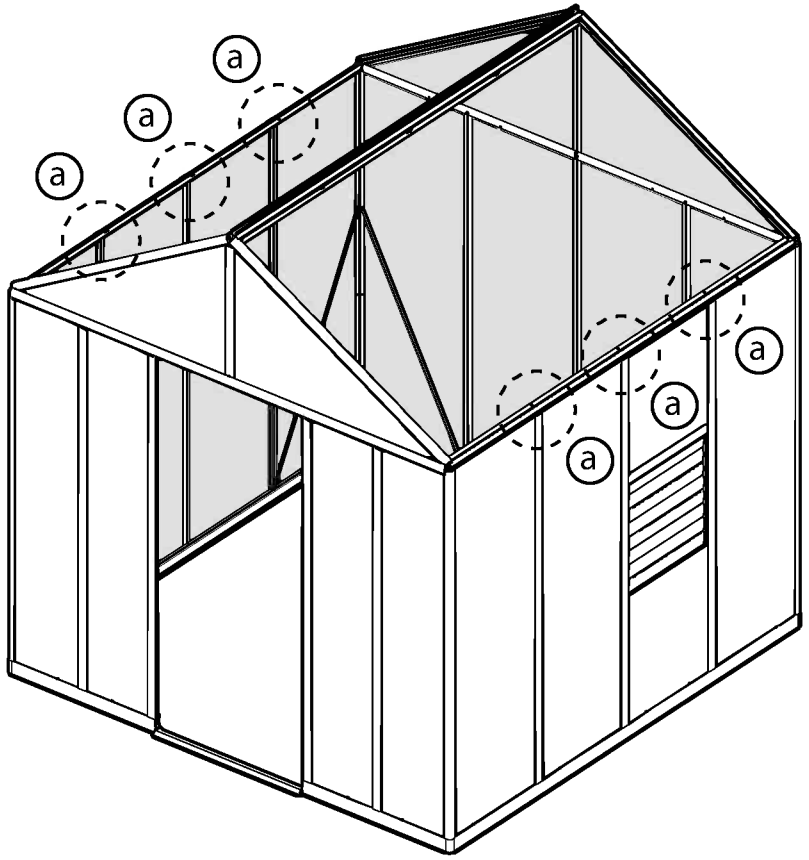
411 .....  6

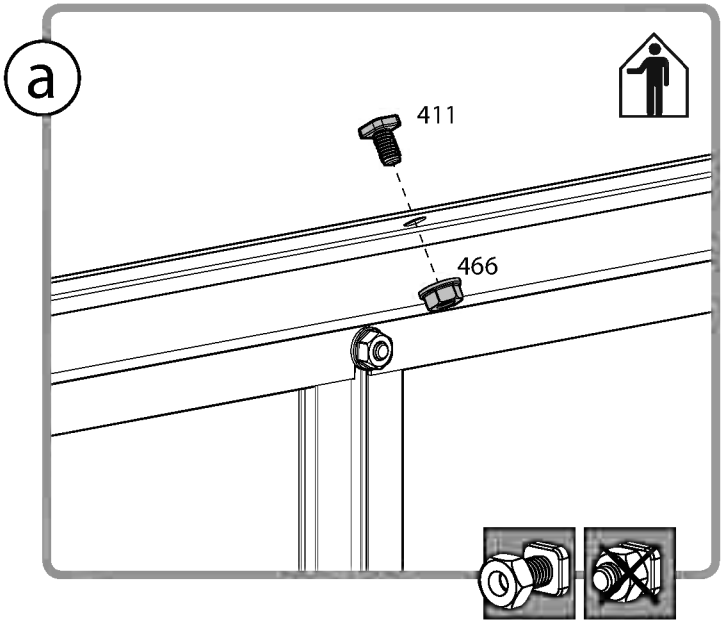
466 .....  6

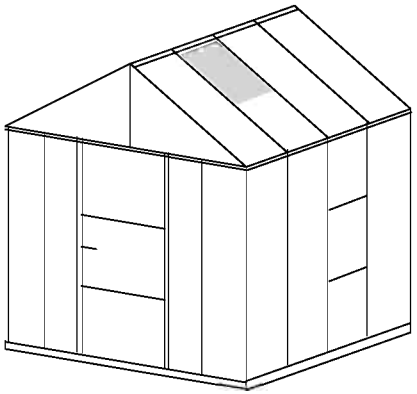


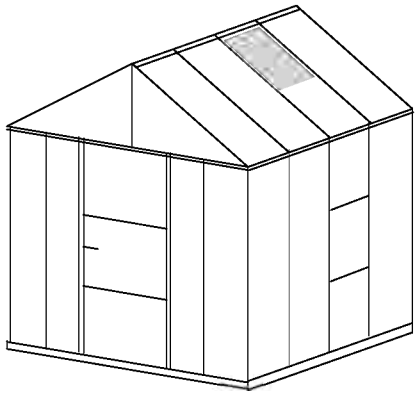
411 ..... +4

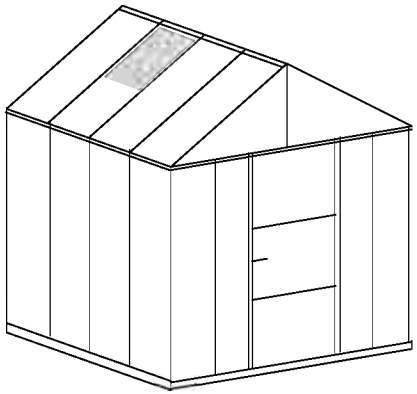
466 ..... +4

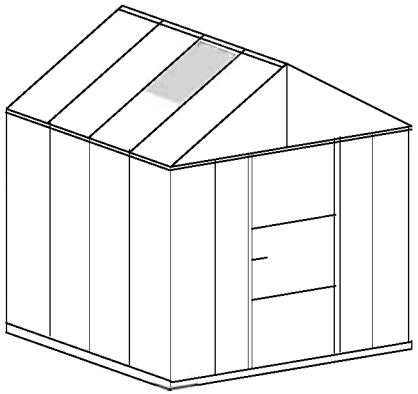


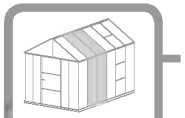


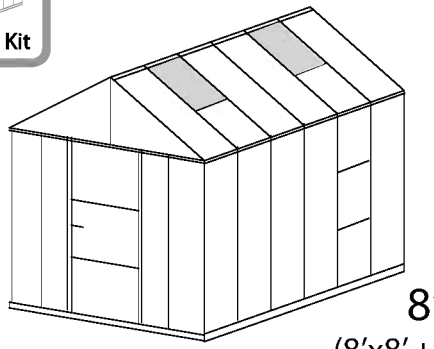


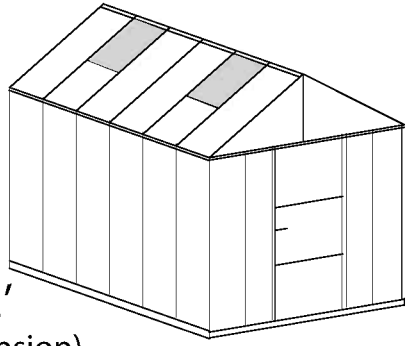




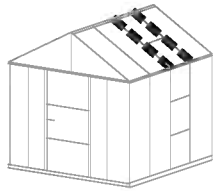








8′x12′
(8′x8′ + Extension)



7885 .....  2

411 .....  4

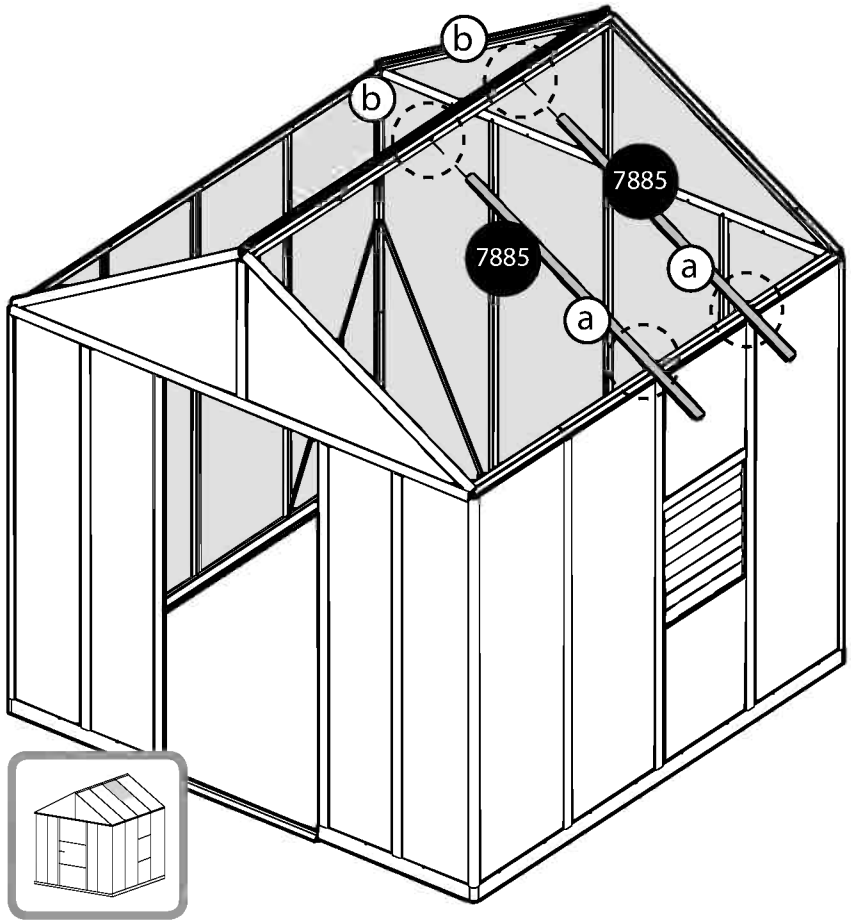
466 .....  4



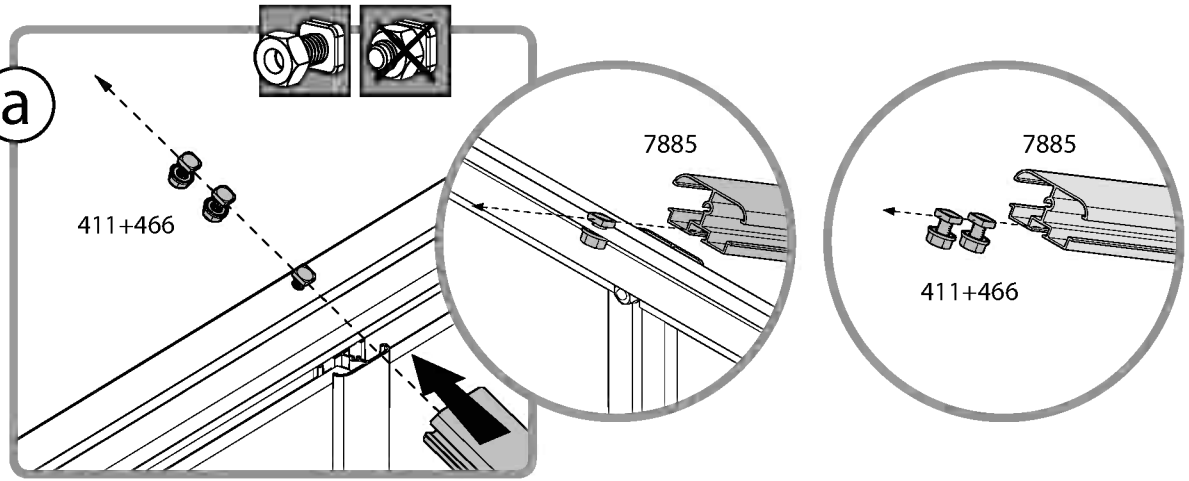
7885 ..... +2

411 ..... +4

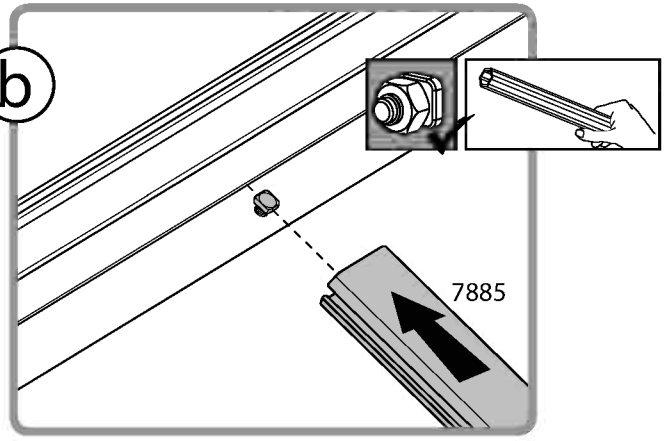
466 ..... +4

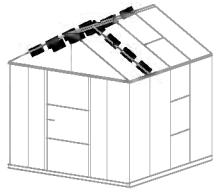


a



b





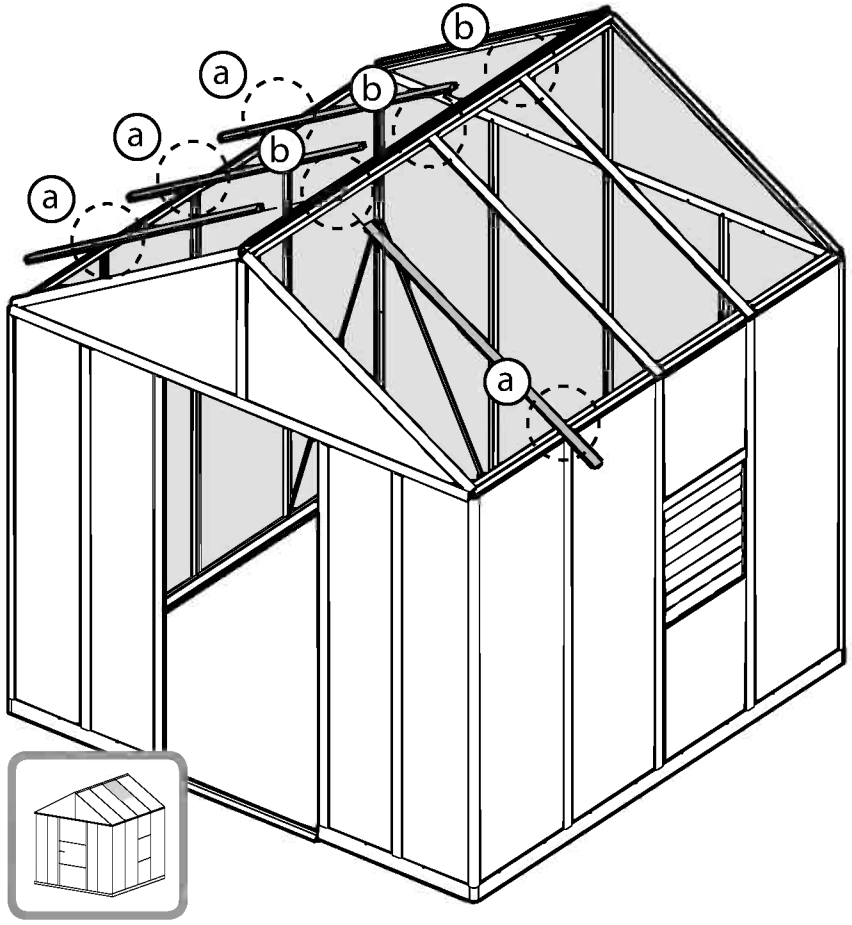
7885 4

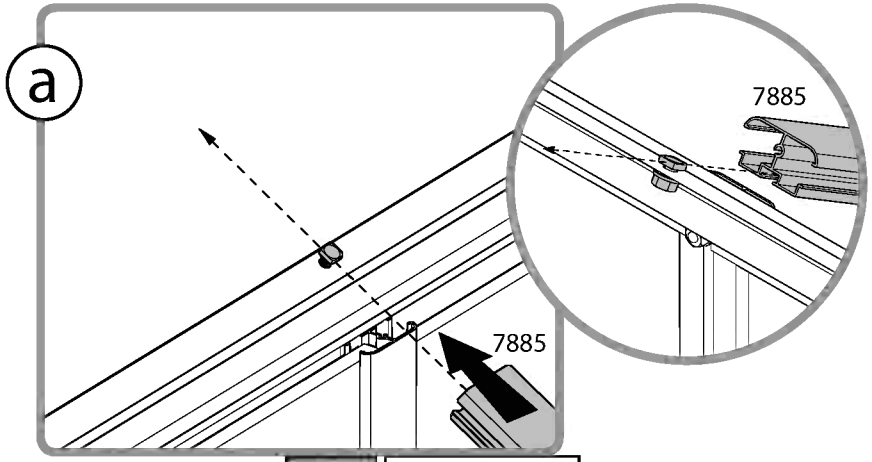


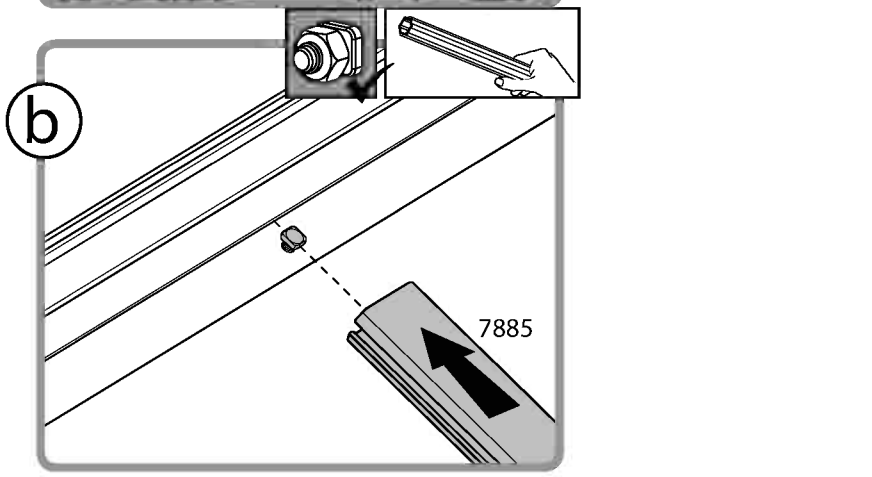


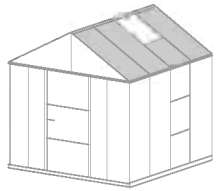


7885 ..... +2









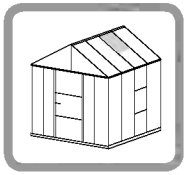
7900 .....  1

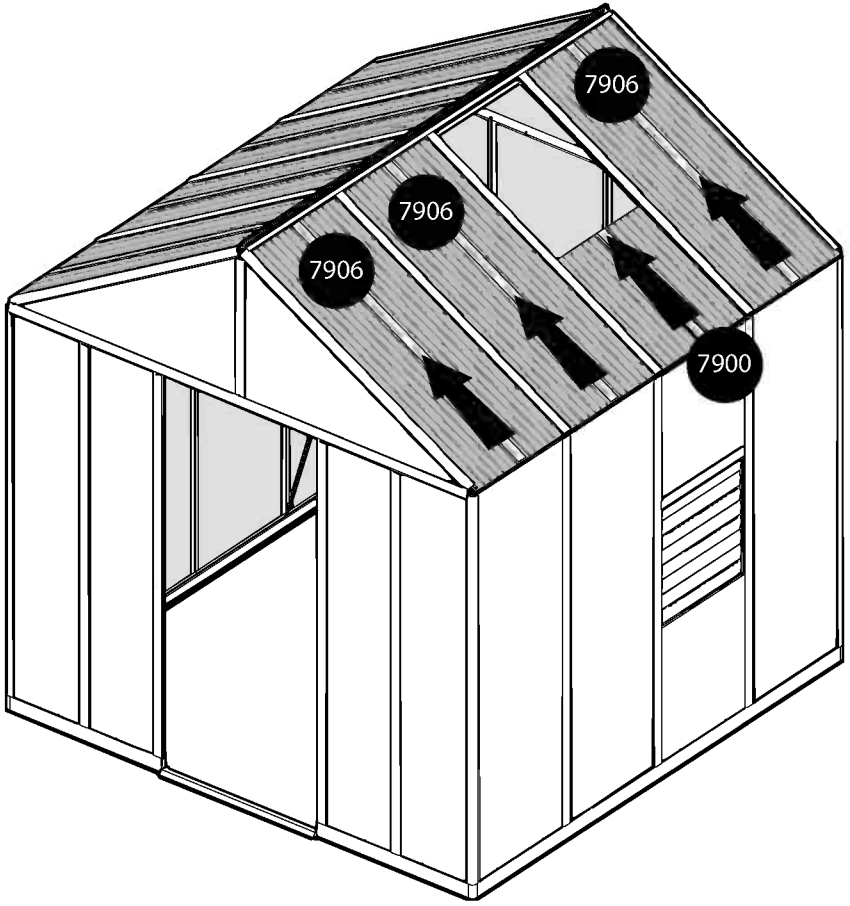
7906 ....  7

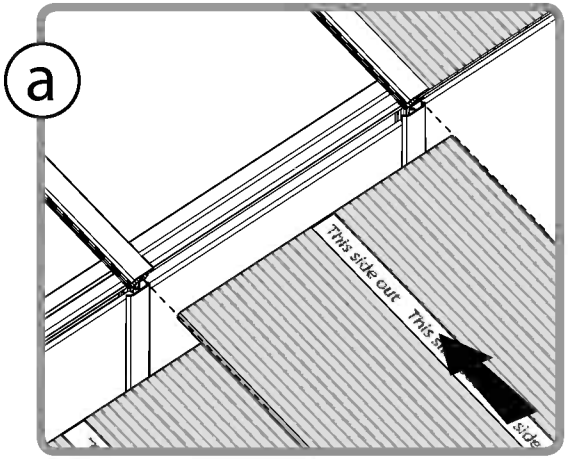


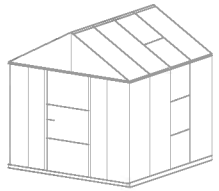
7900 ..... +1

7906 ..... +3

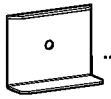








7894 6



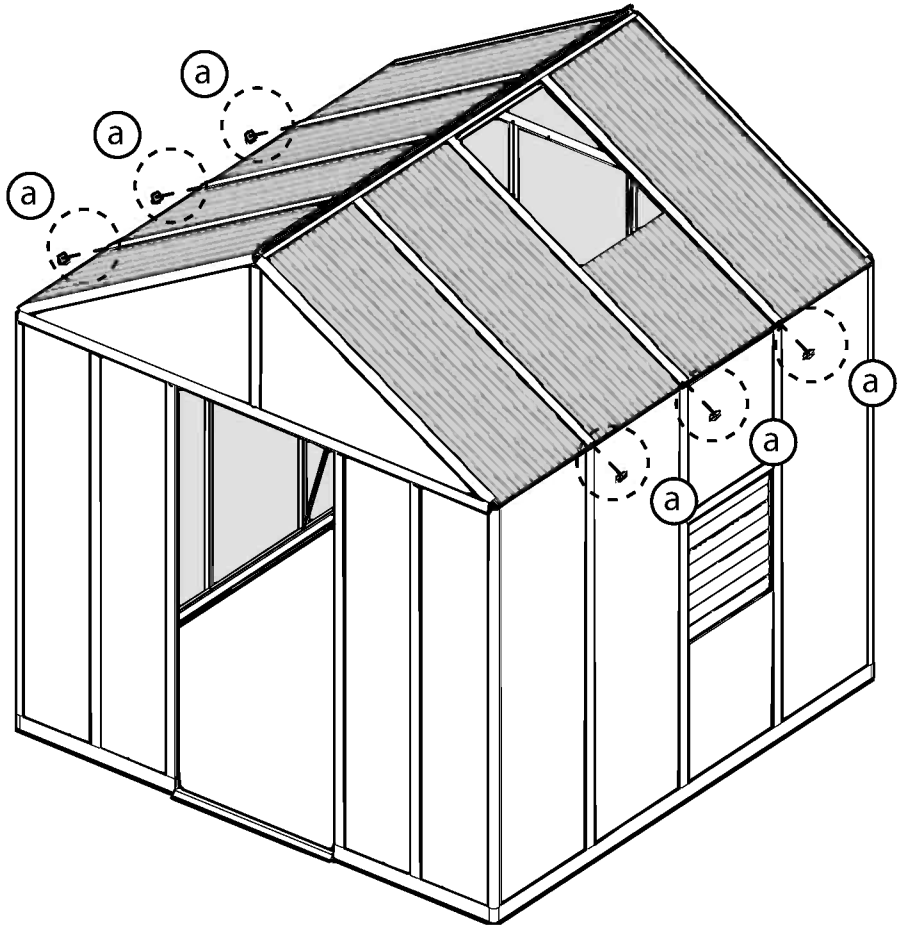
4008 6

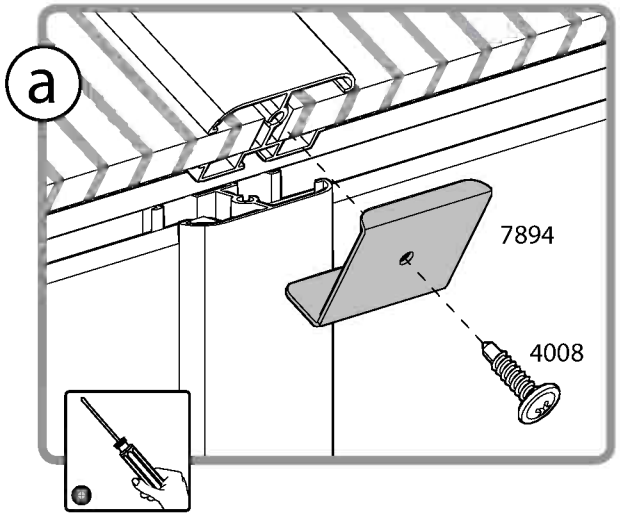


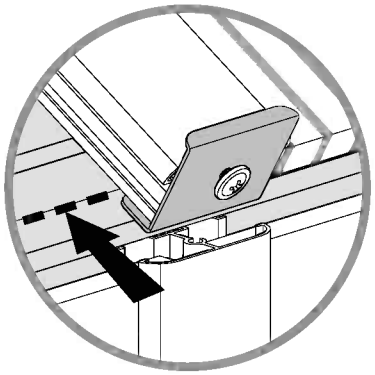


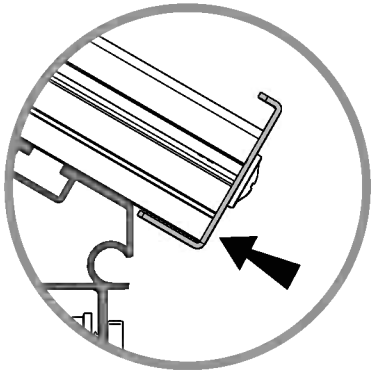
7894 ..... +2

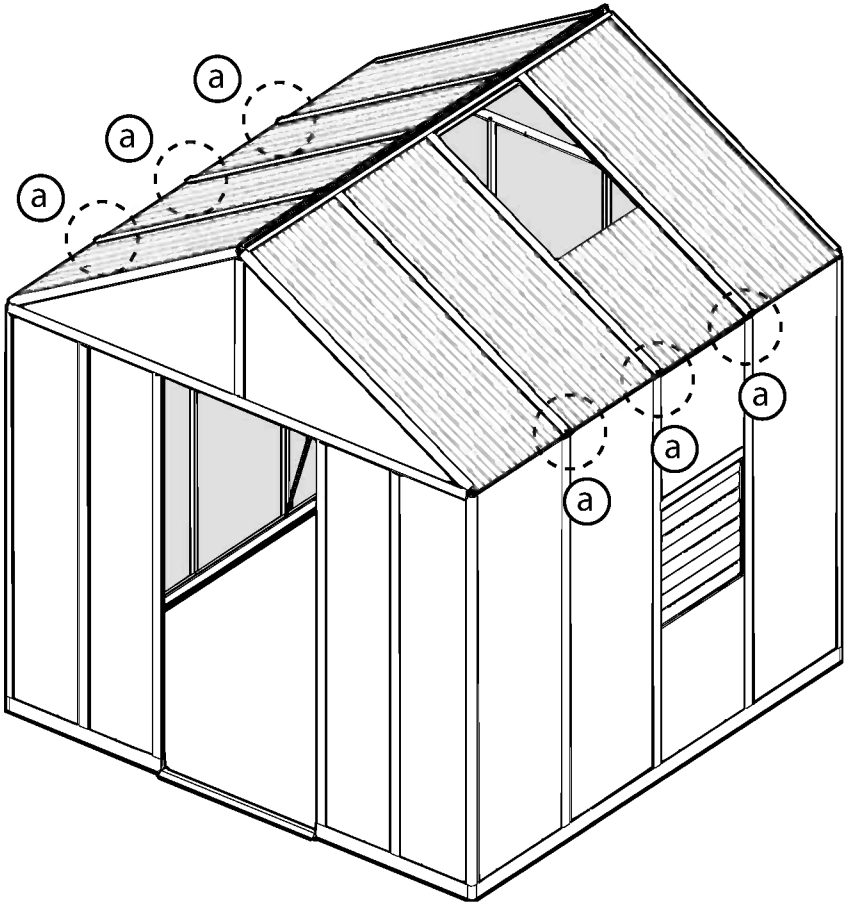
4008 ..... +2

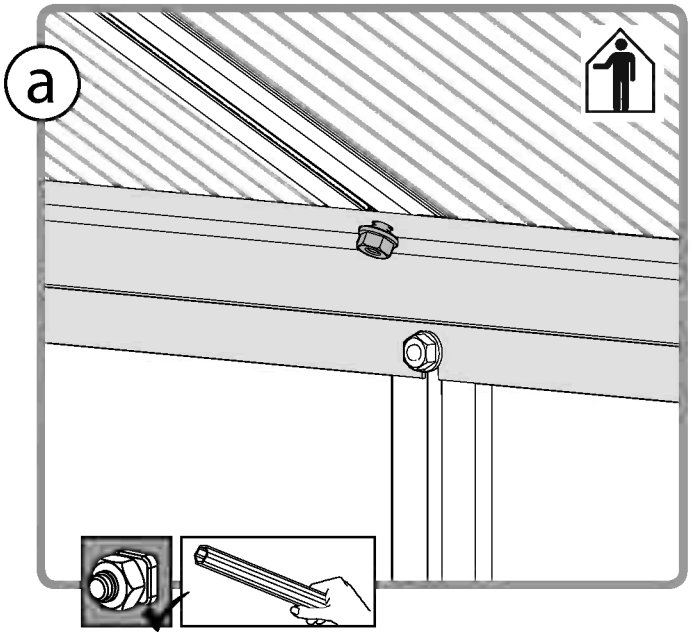


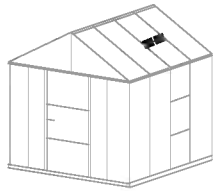


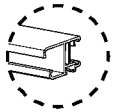




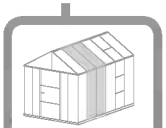

a
a
a
a
a
a


a



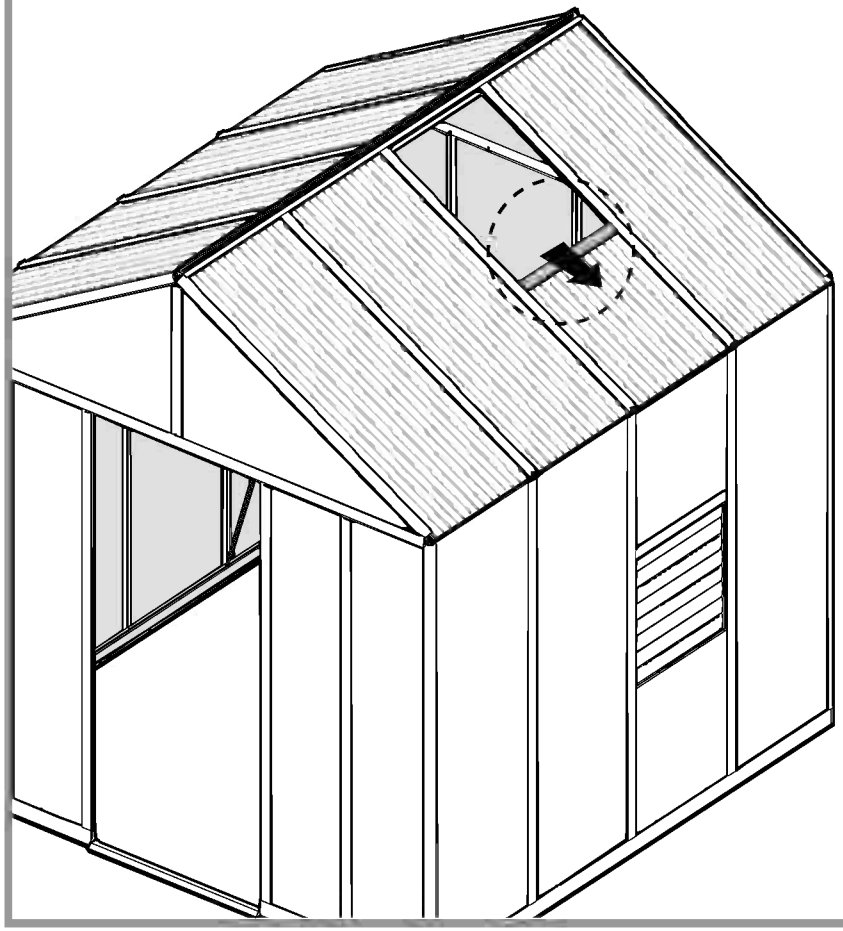
7890 .....   1

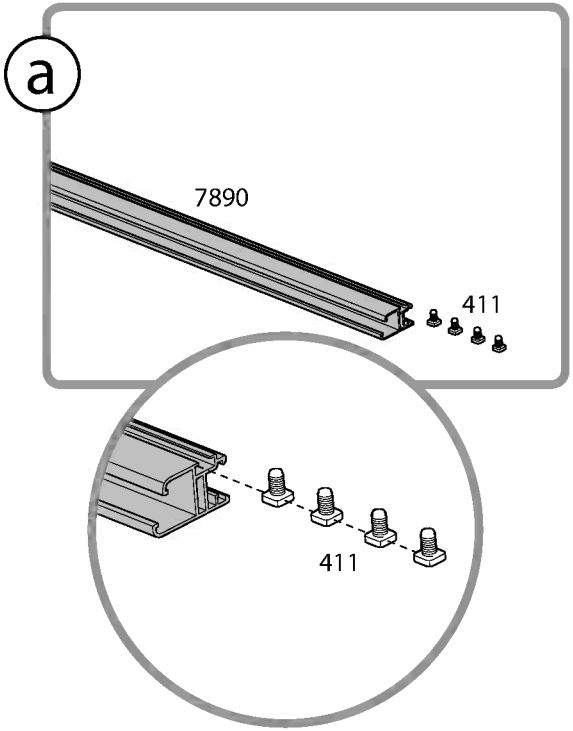
411 .....  4

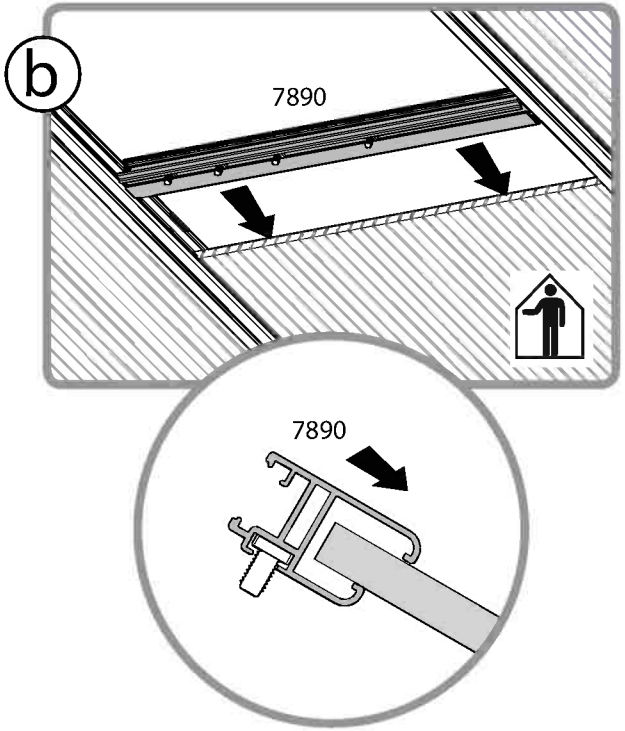


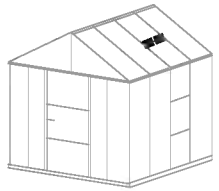
7890 ..... +1

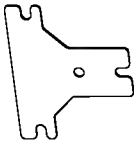
411 ..... +4



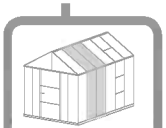






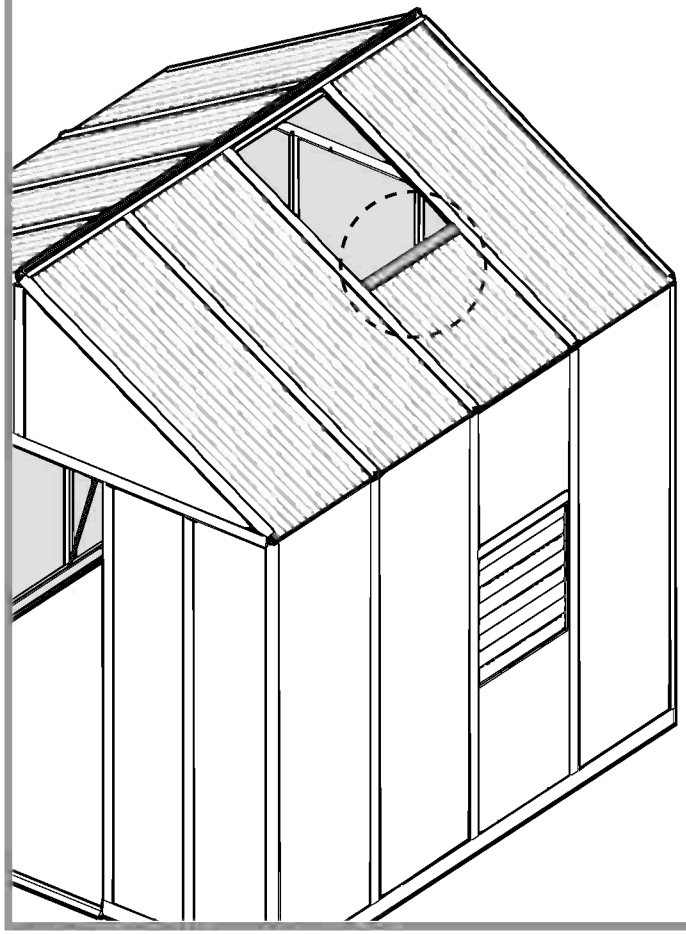
7898 .....  2

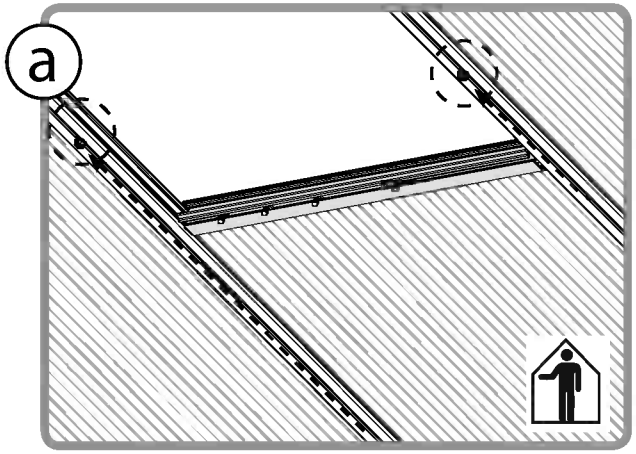
466 .....  4

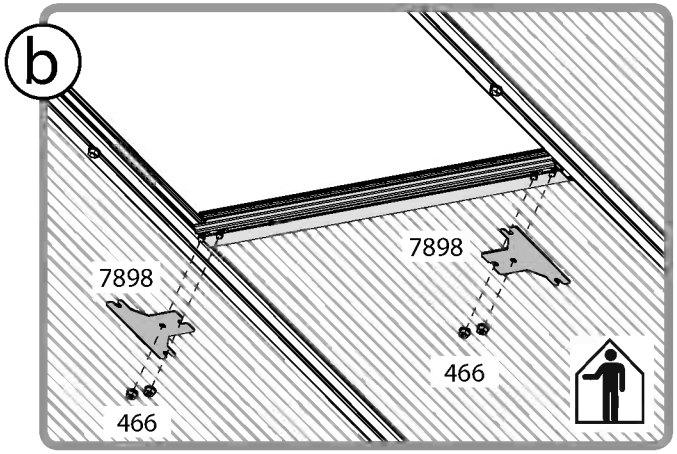


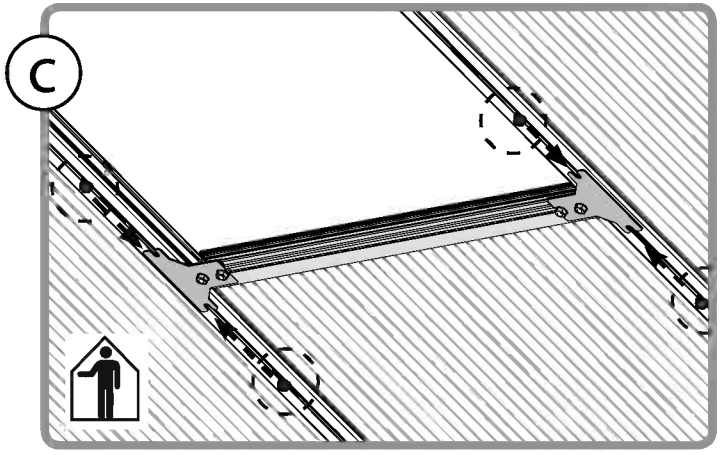
7898 ..... +2

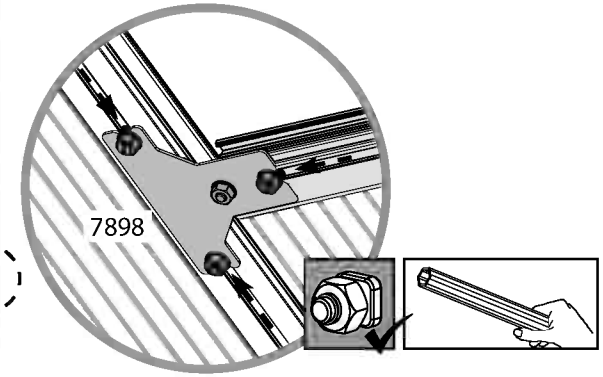
466 ..... +4

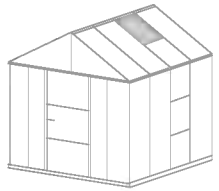


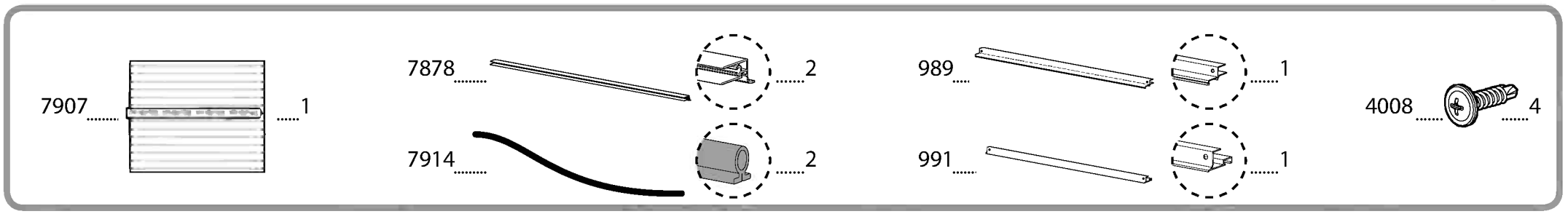


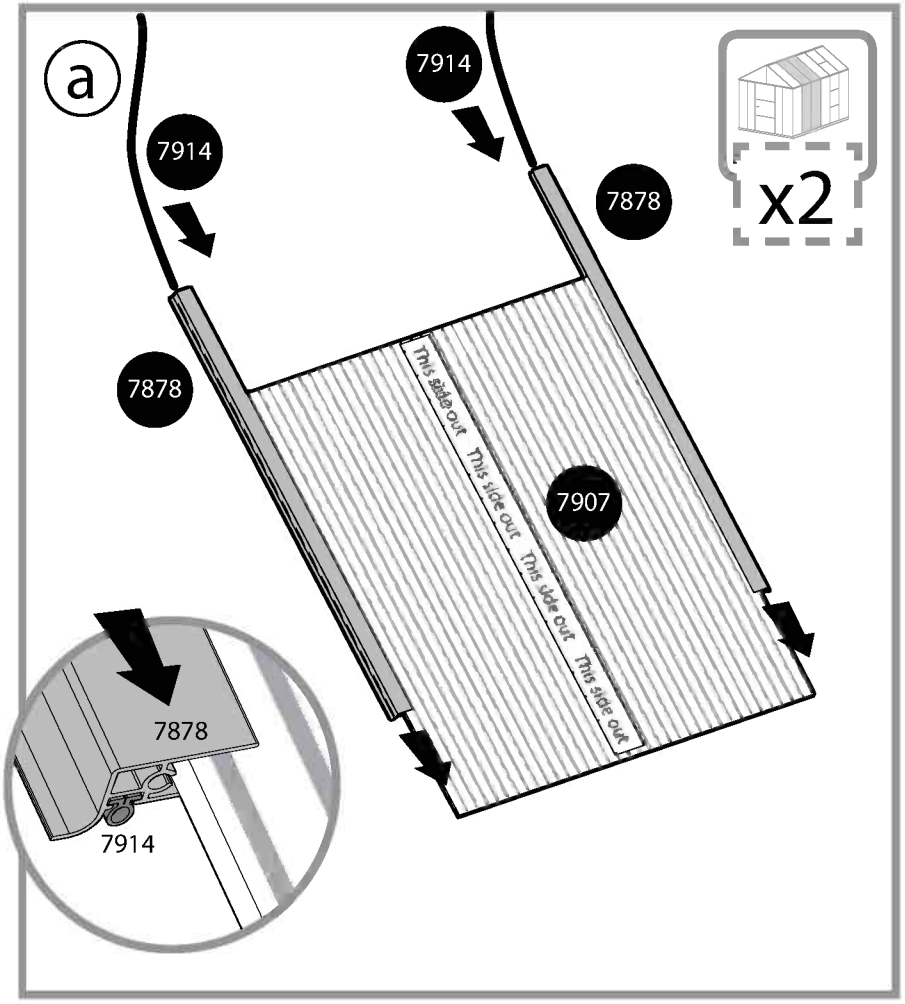


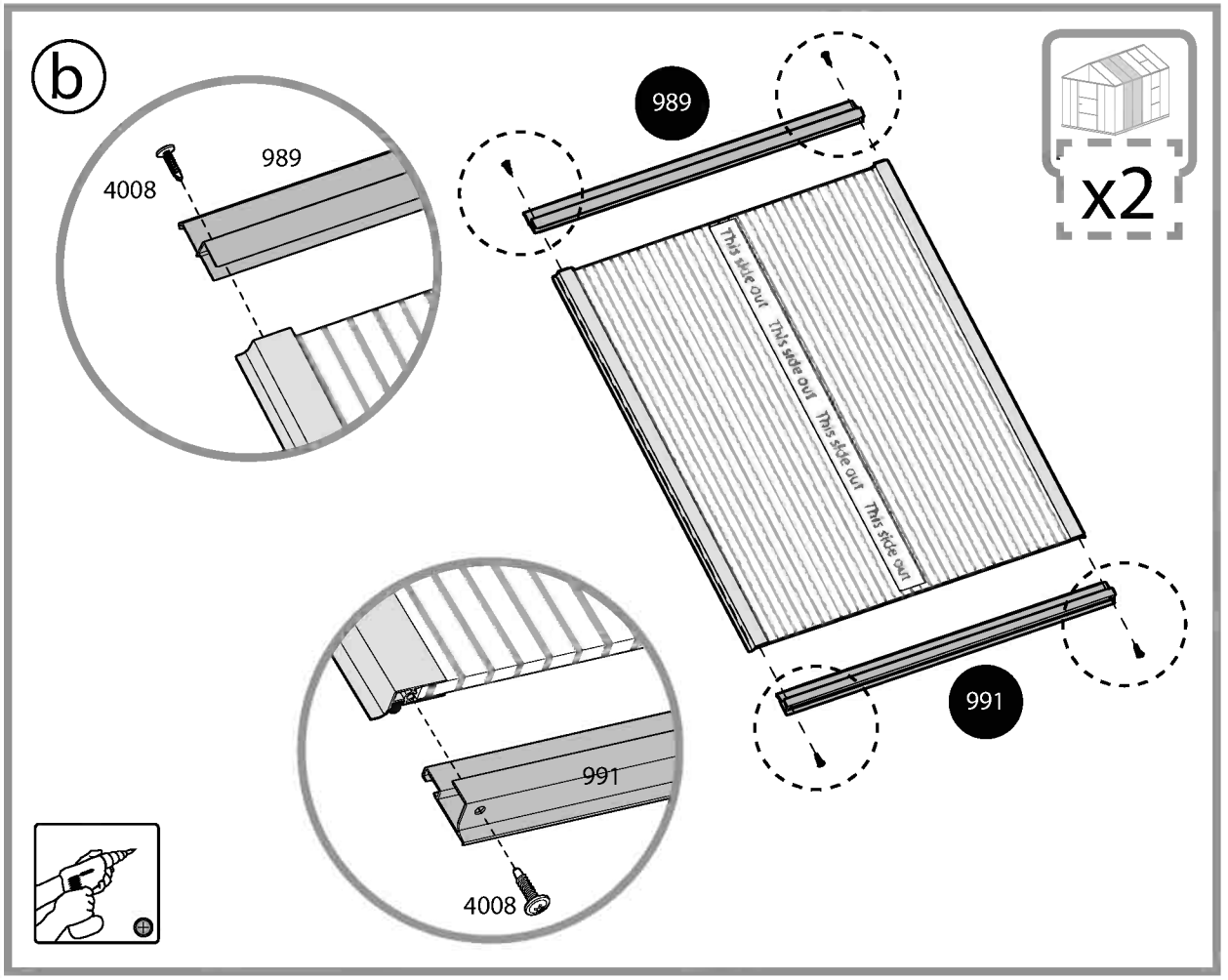


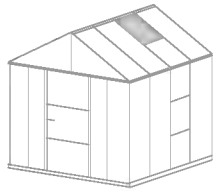


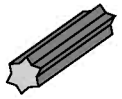



7907
1
7878
2
7914
2
989
1
991
1
4008
4


a
7914
7914
7878
7878
7907
This side out
This side out
This side out
This side out
x2
7878
7914

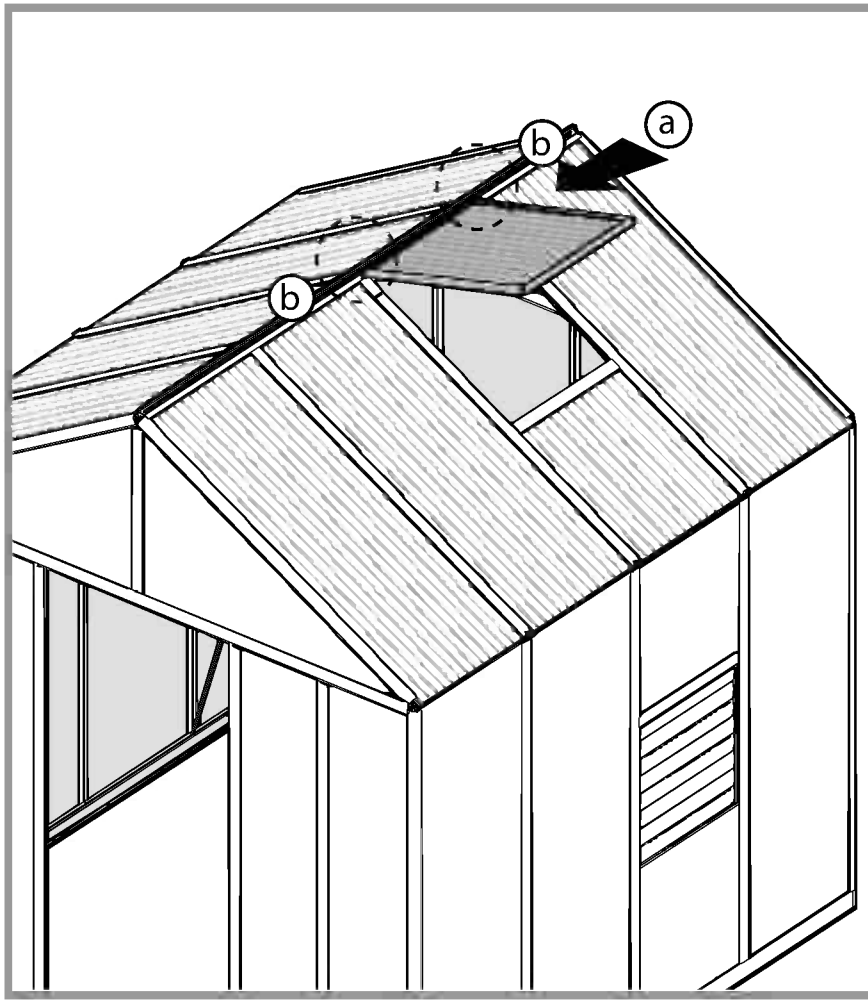

b
4008
989
989
This side out
This side out
This side out
This side out
x2
991
991
4008

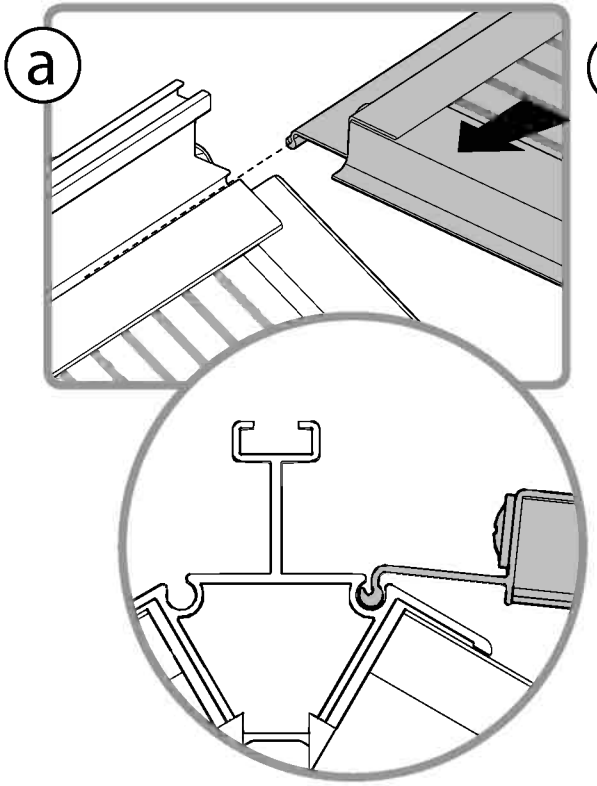


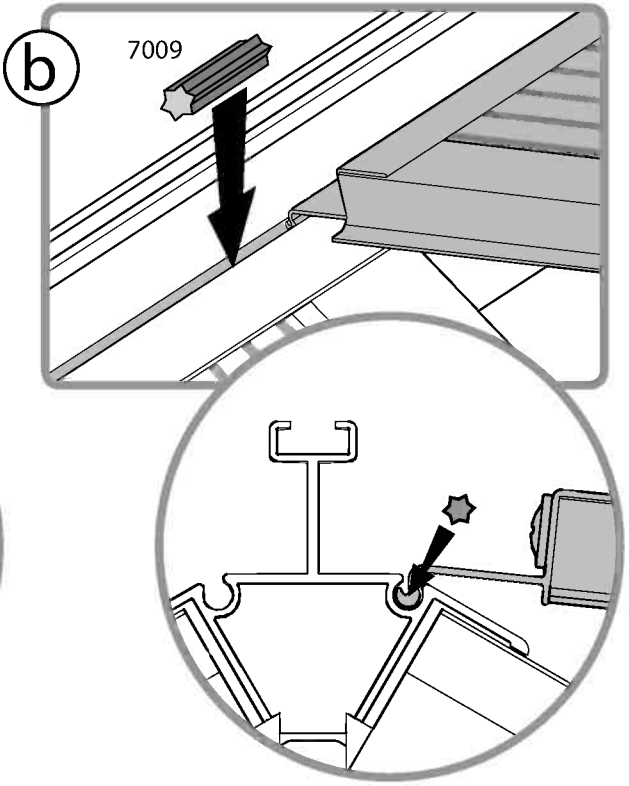
7009 .....  2

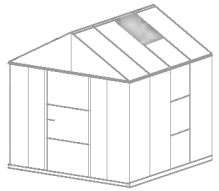
Extension Kit

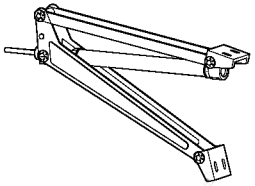
7009 ..... +2

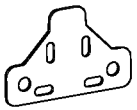






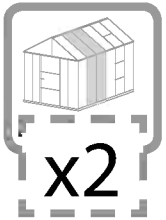


7942 .....  1

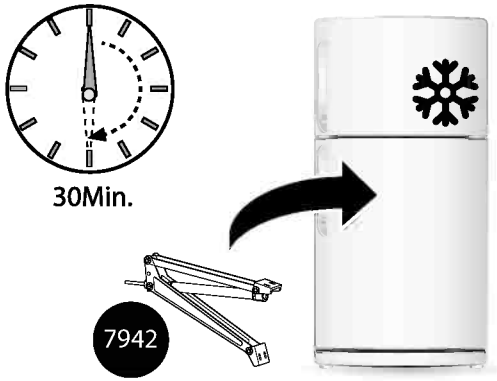
964 .....  2

465 .....  4

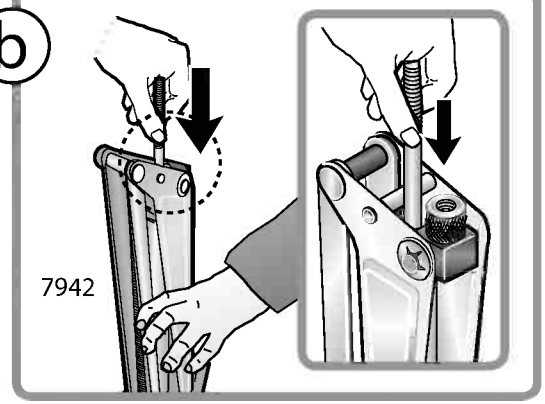
422 .....  4



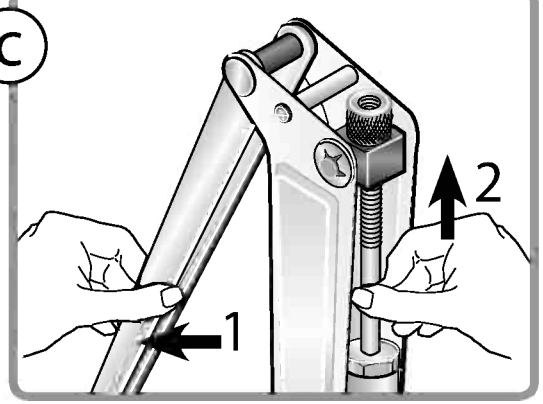
a



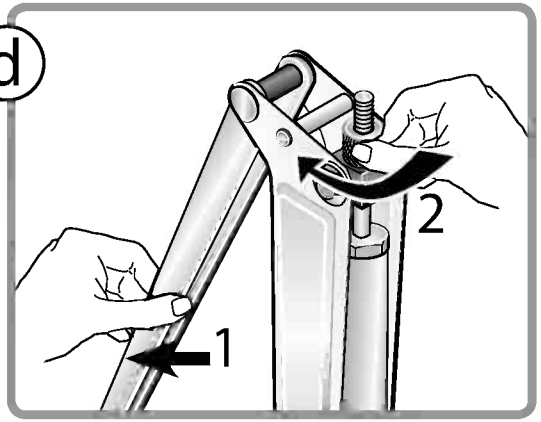
b



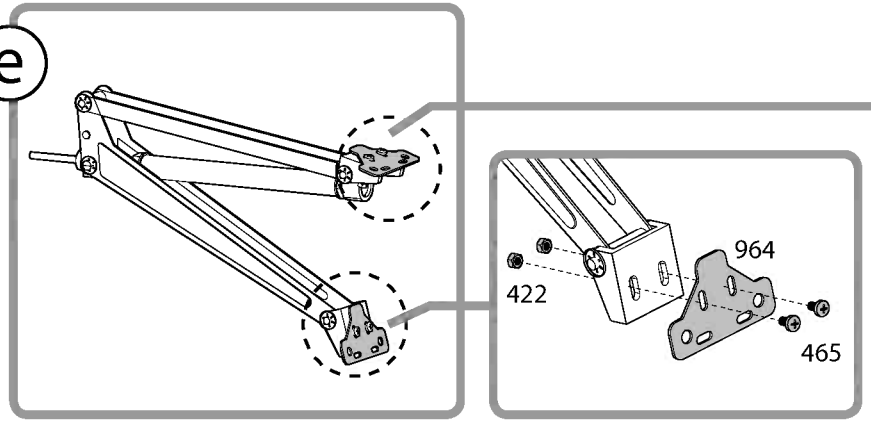
c

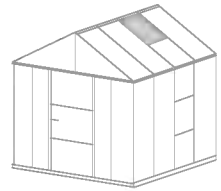


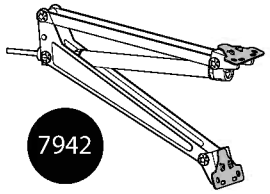
d



e



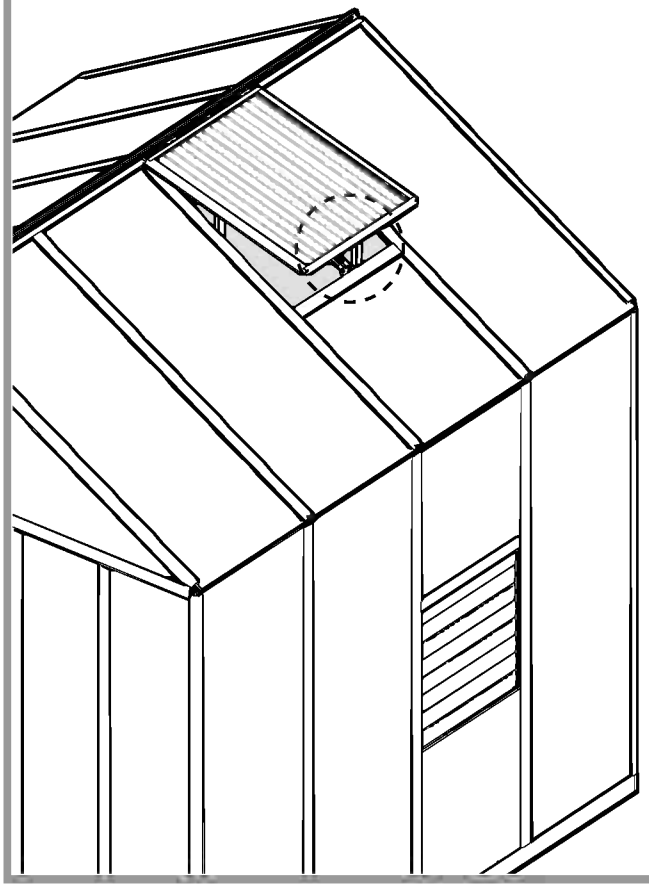


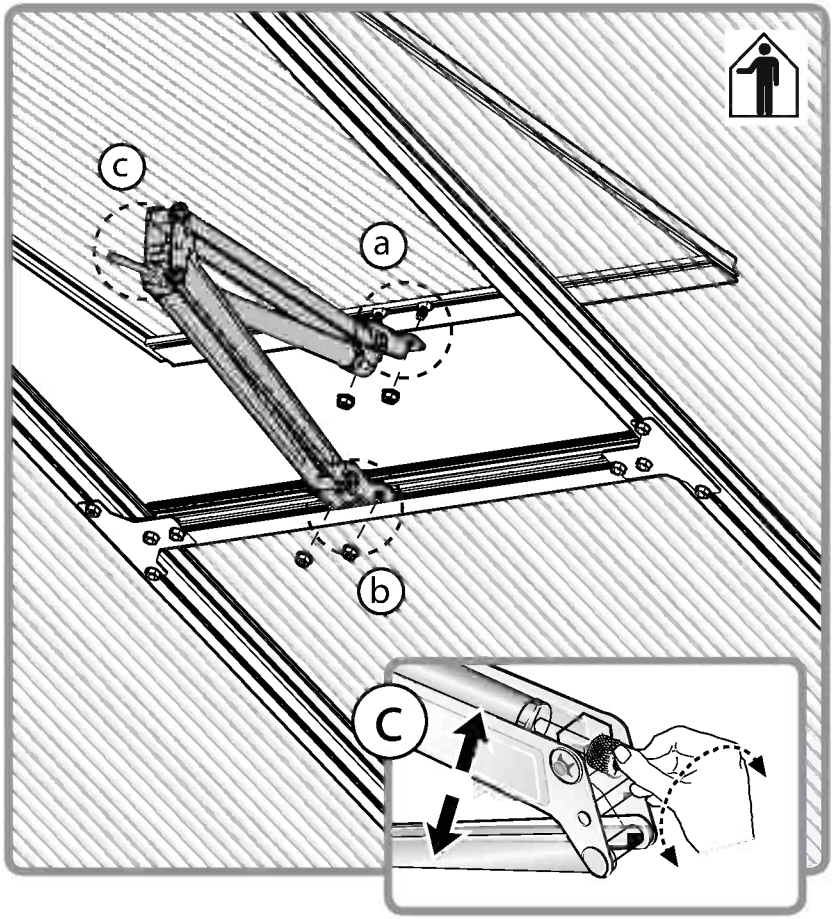


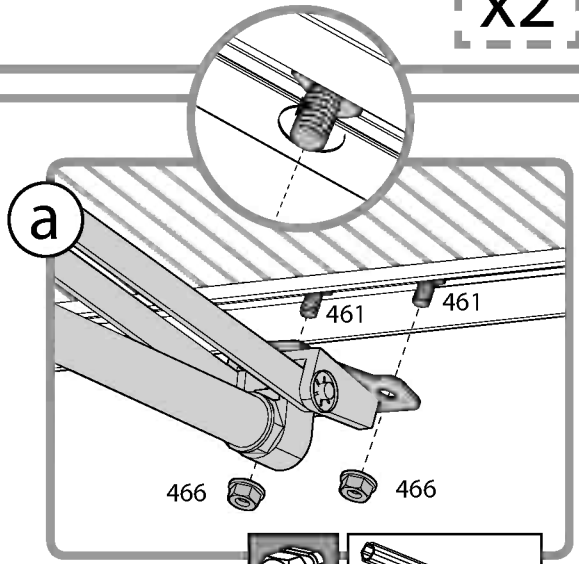
461 4

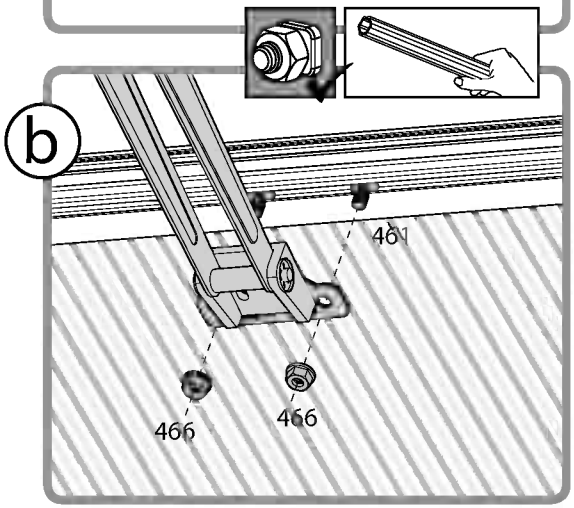
466 4

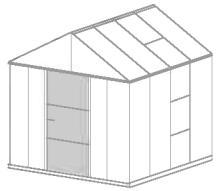
x2

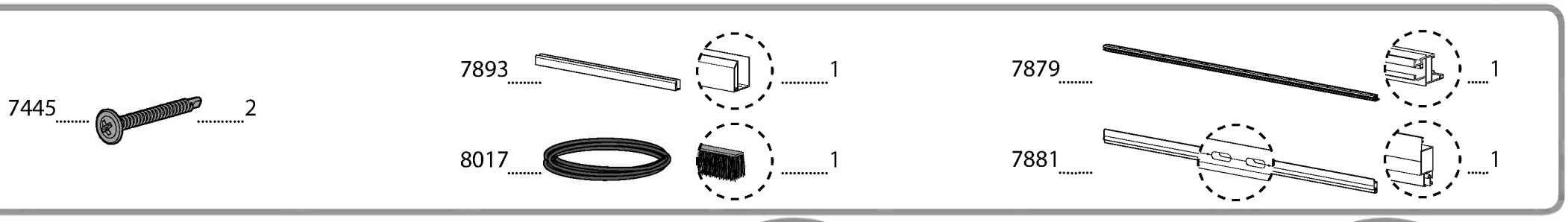


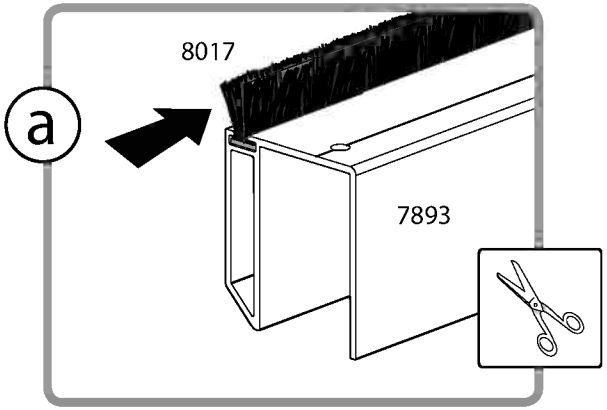


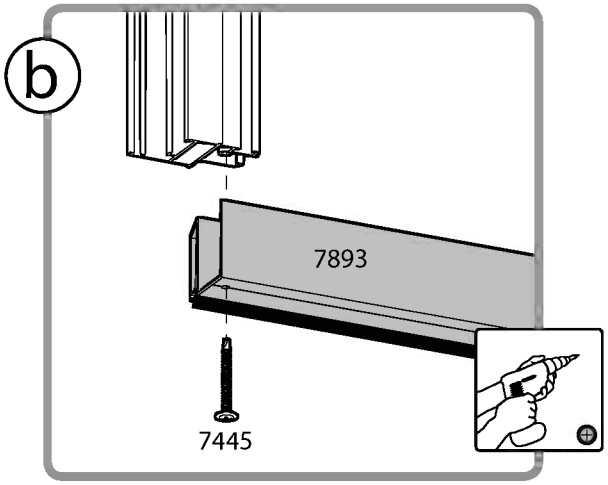


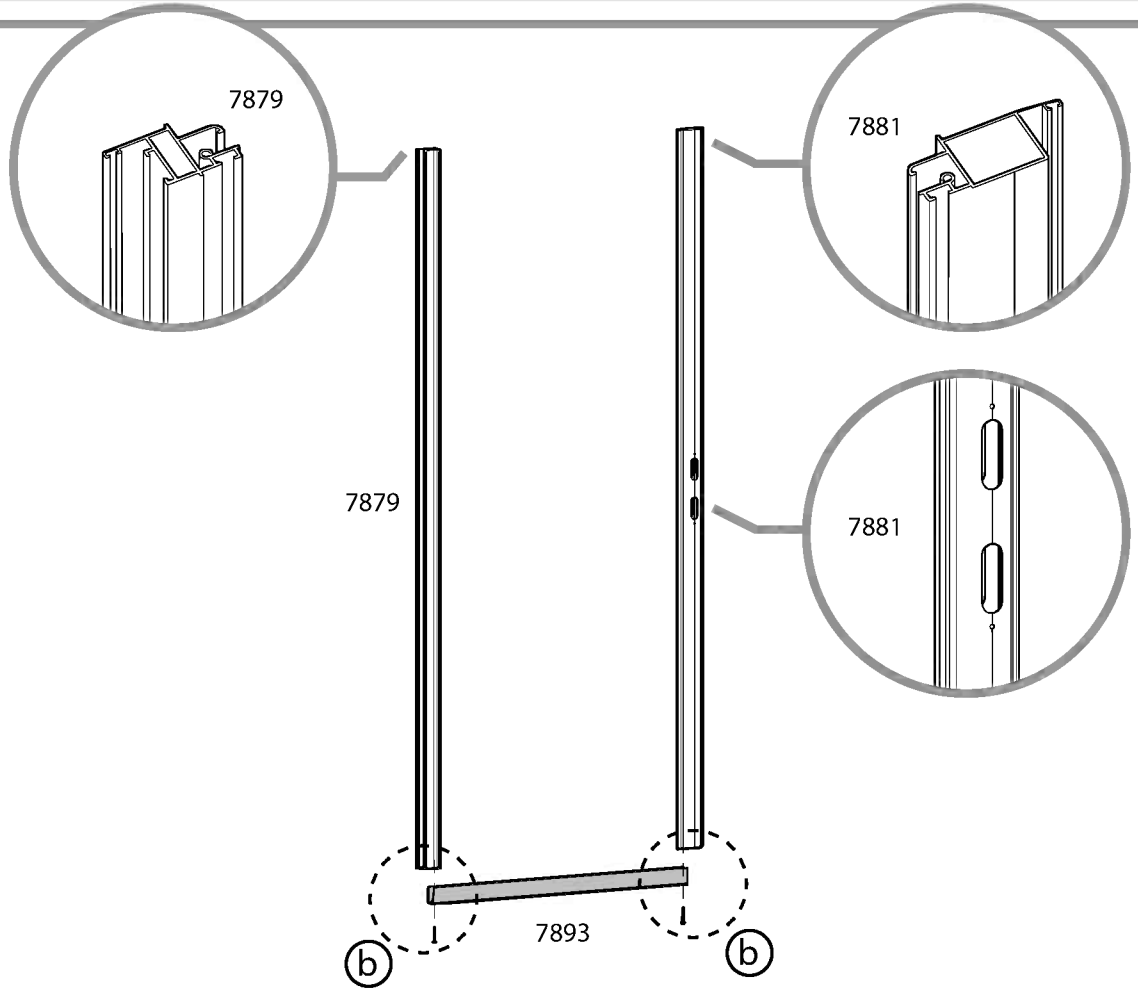


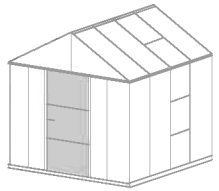



7445
2
7893
1
7879
1
8017
1
7881
1

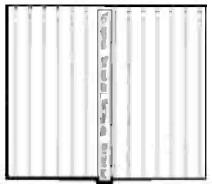

a
8017
7893


b
7893
7445


7879
7881
7879
7881
b
7893
b



7905 1



7887 .....



..... 1

411 .....

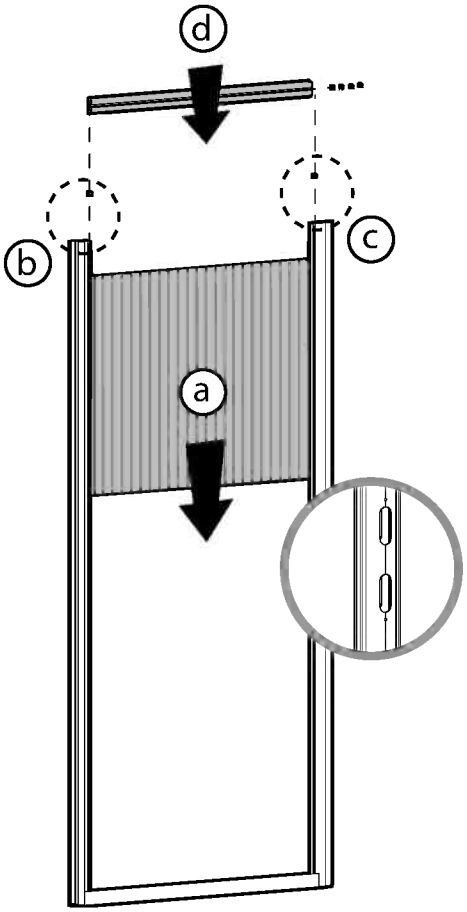


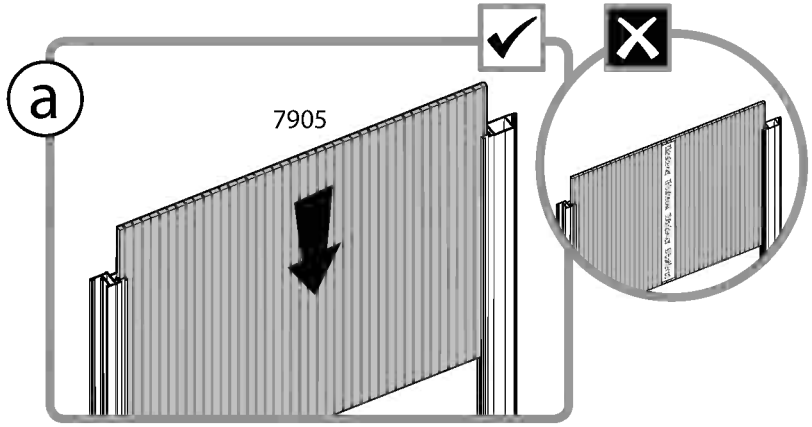
..... 6

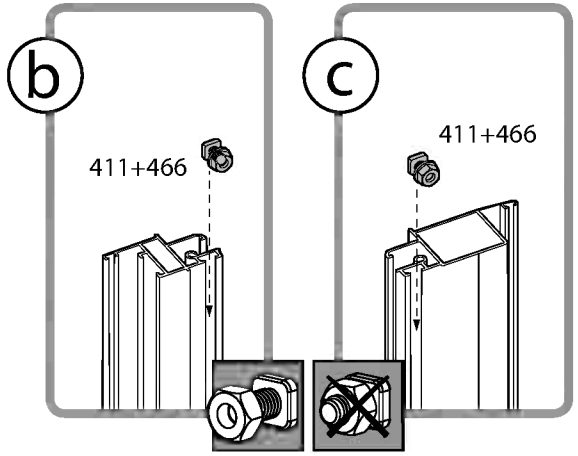
466 .....

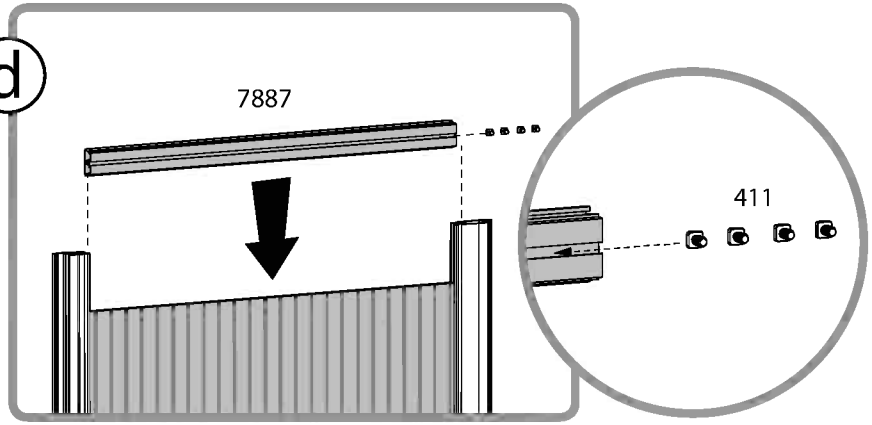


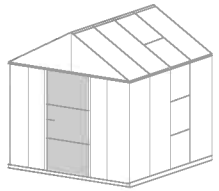
..... 2

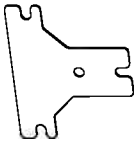






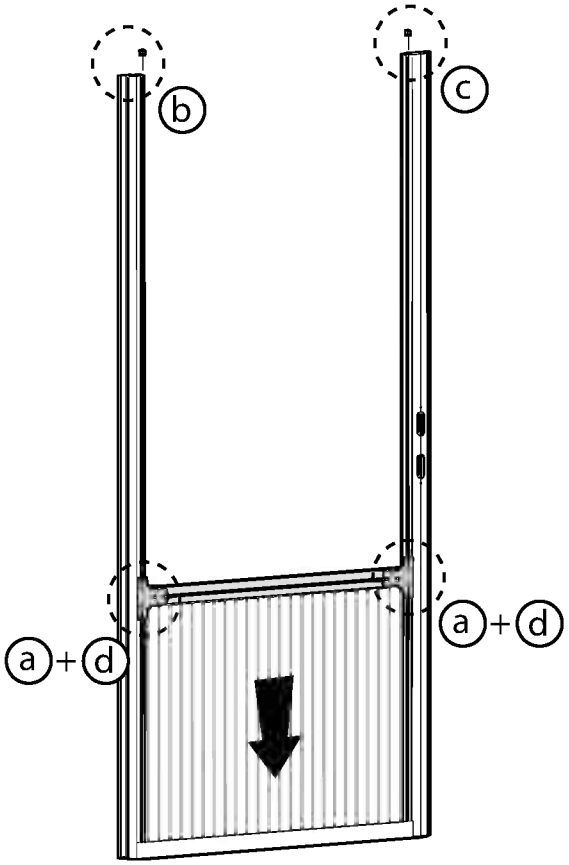


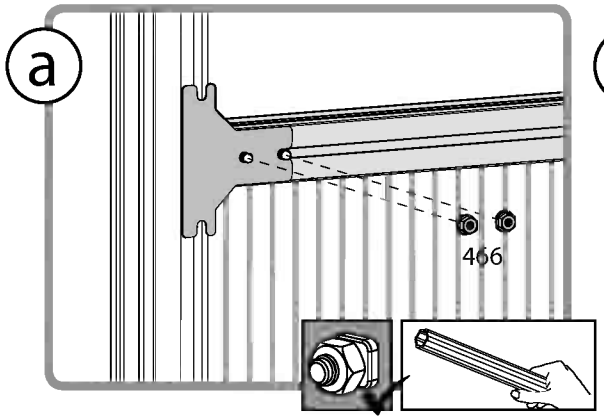


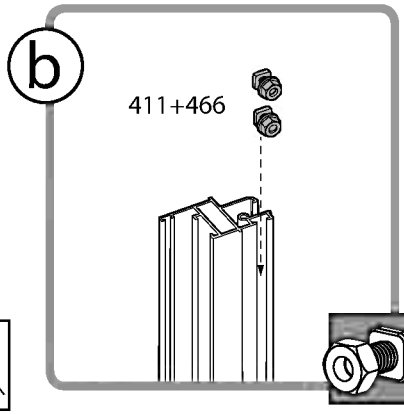
7898 .....  2

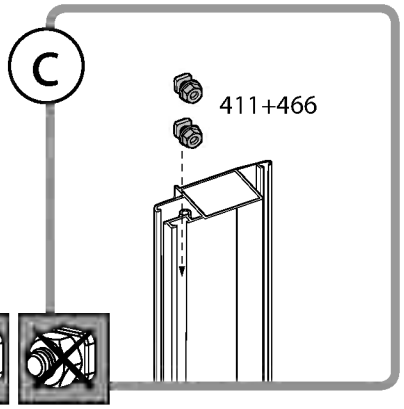
411 .....  4

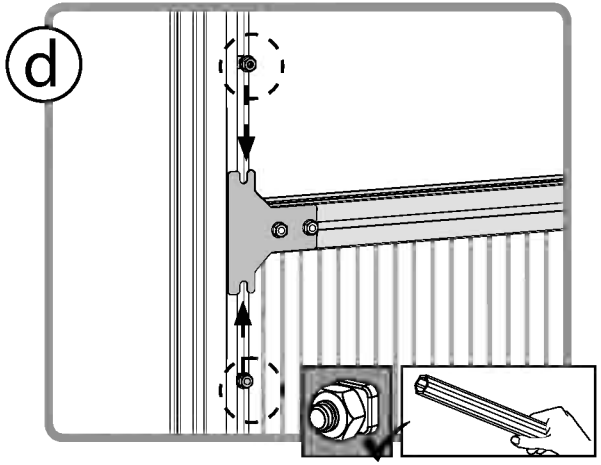
466 .....  8

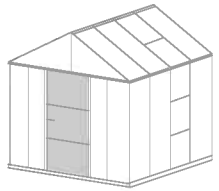


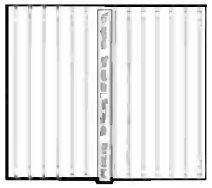




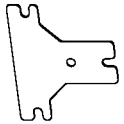






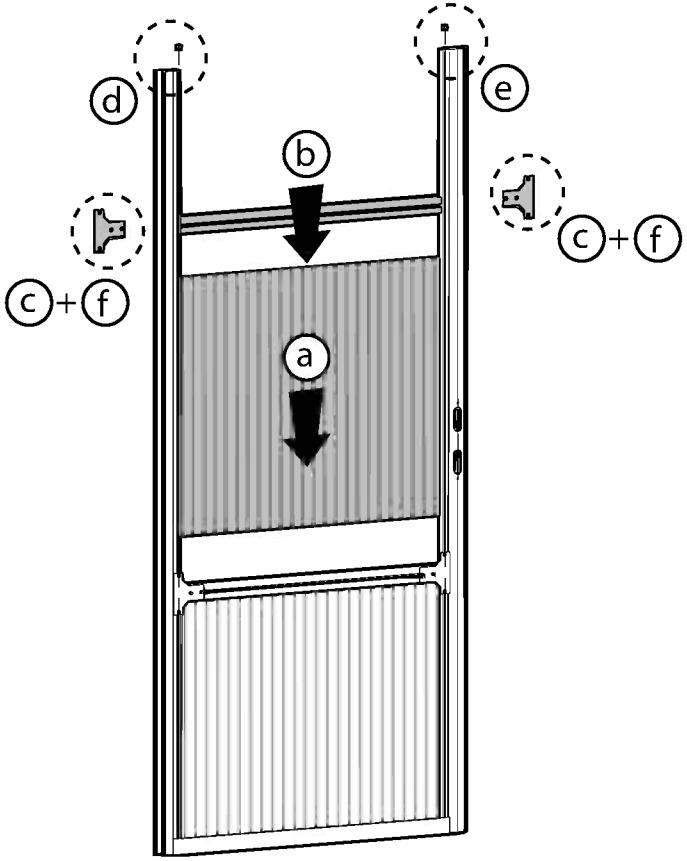

7905 1

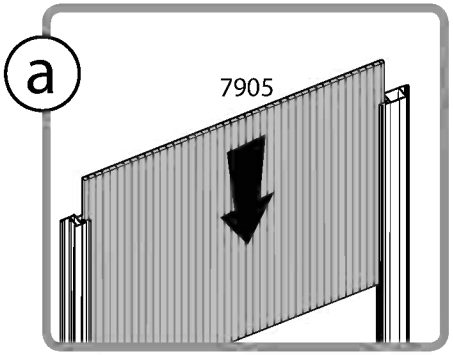

7887 1

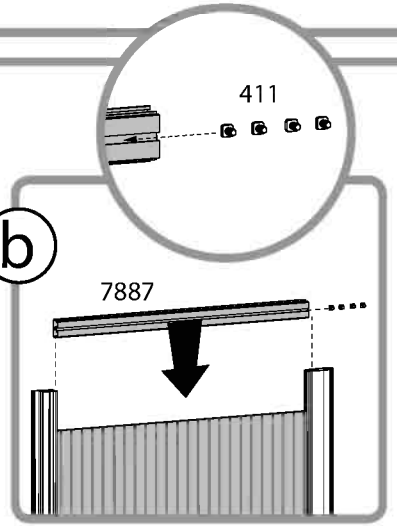

7898 2

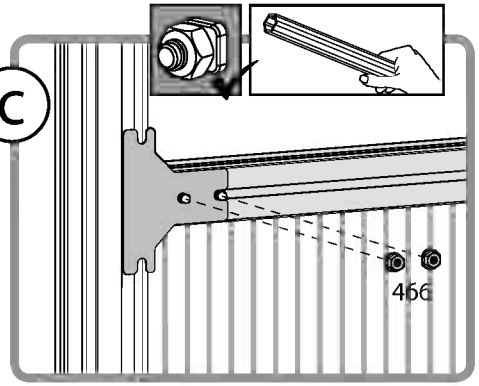

411 6

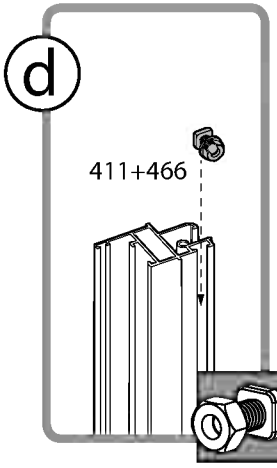

466 6

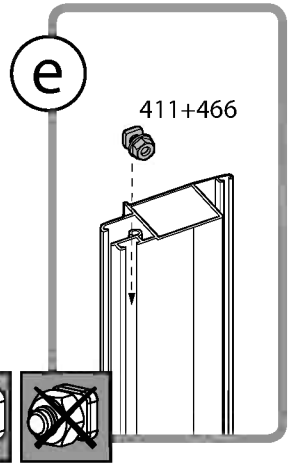


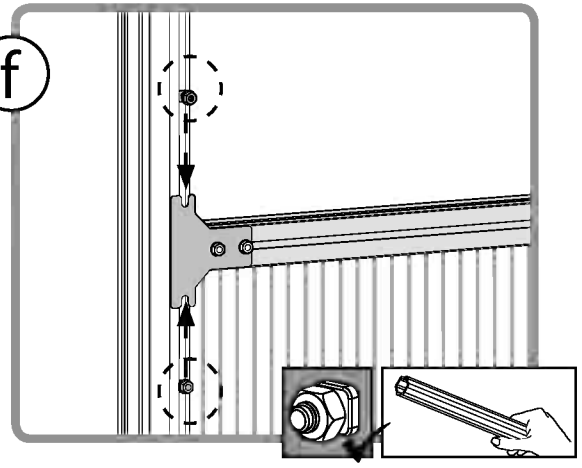


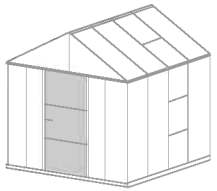




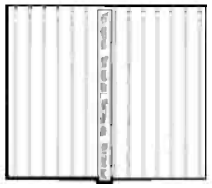




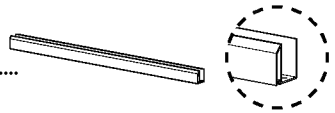




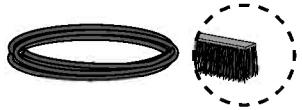
7905 1



7893 1

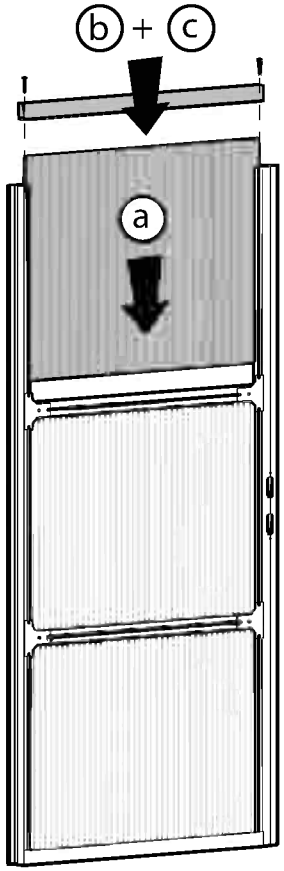


8017 1

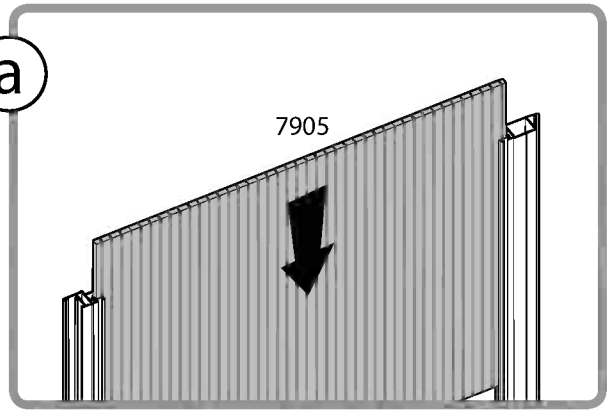


7445 2

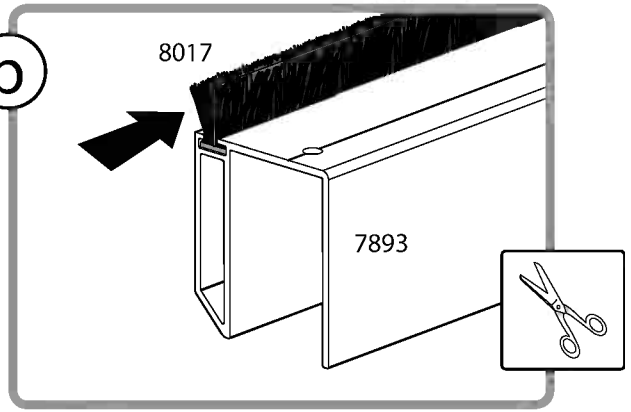




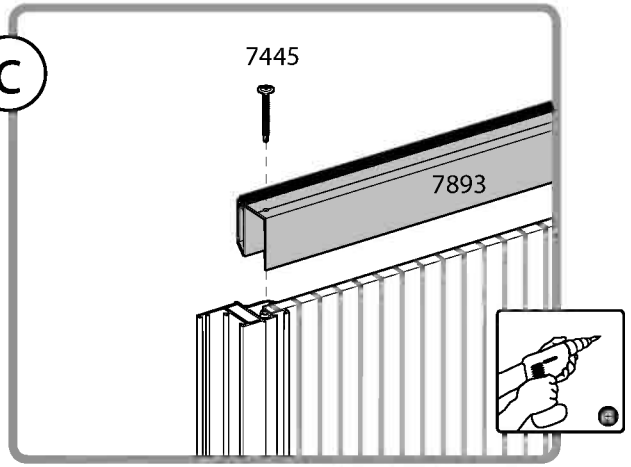
a

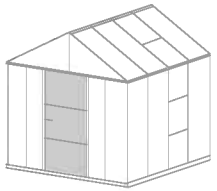


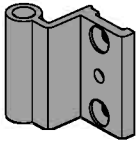
b



c

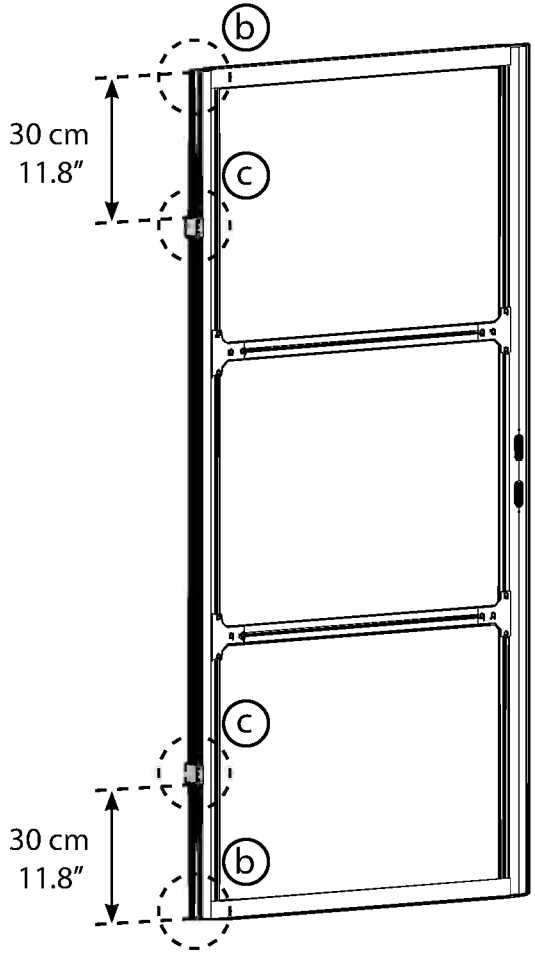




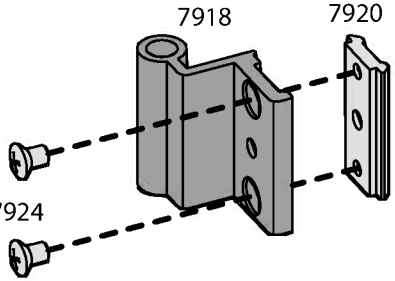
7918  2

7920  2

7924  4

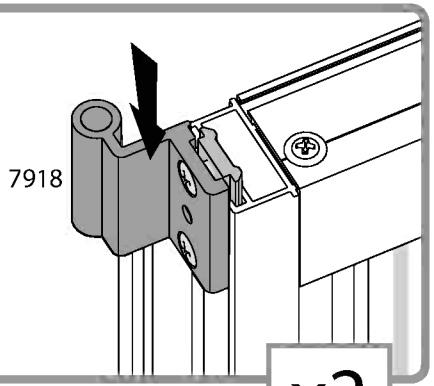


a



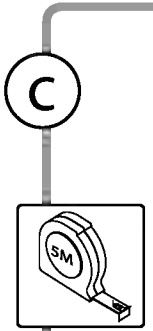
x2

b

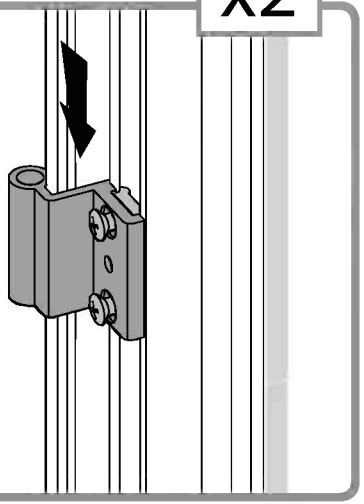


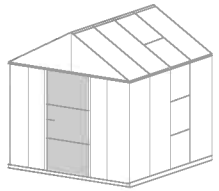
x2

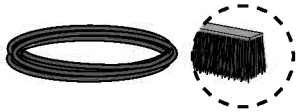
c

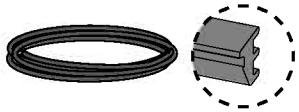


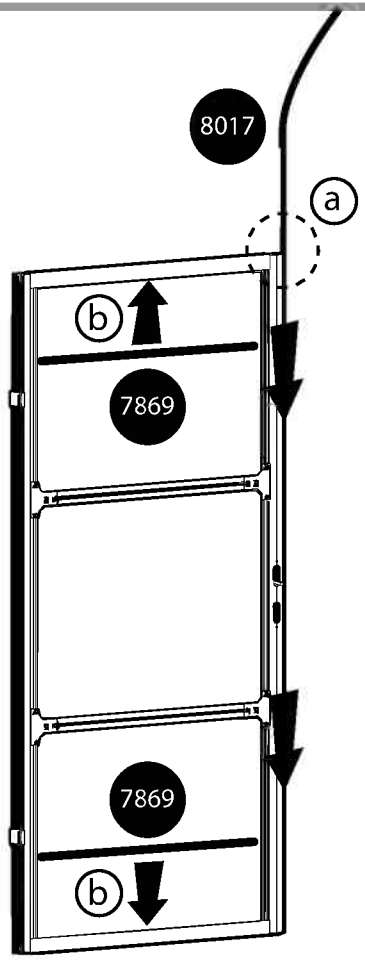


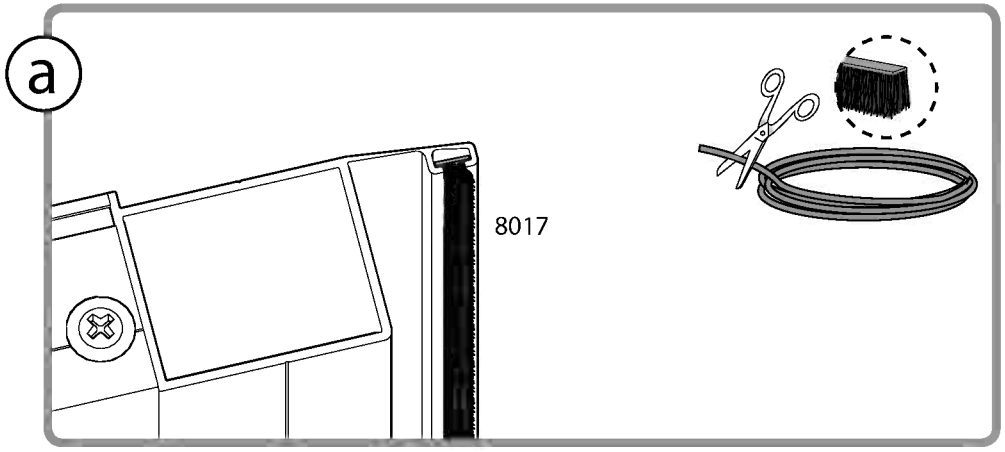


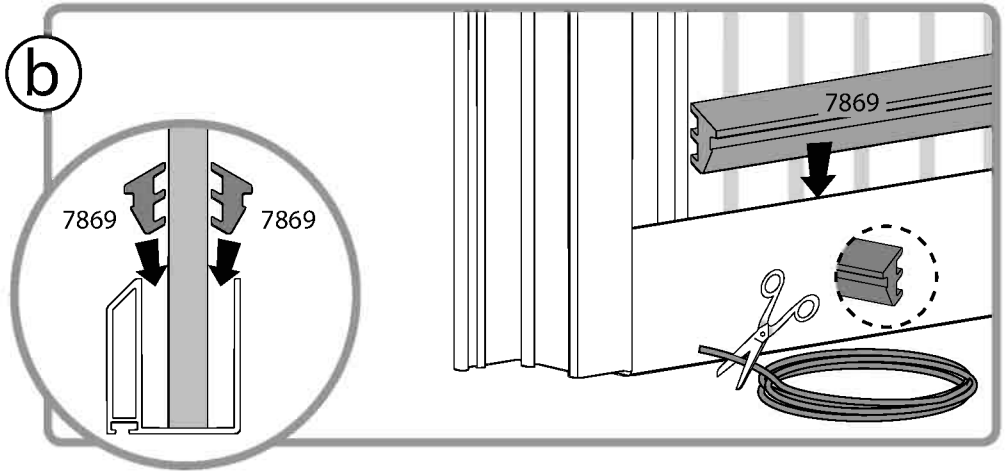


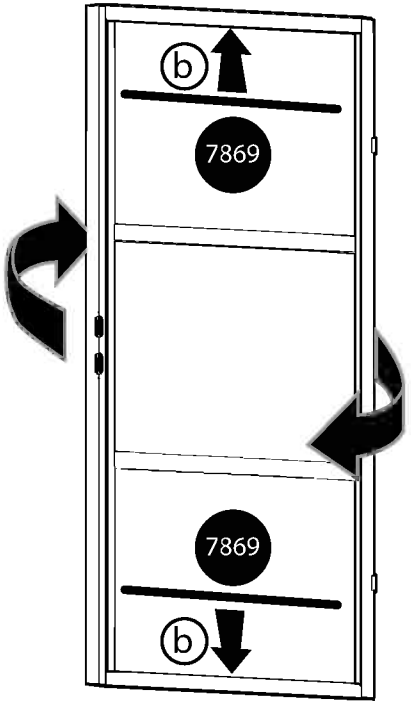
8017 .....  1

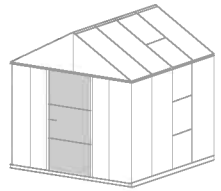
7869 .....  1

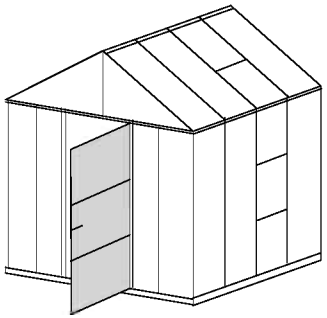


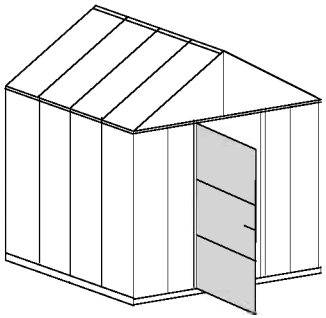


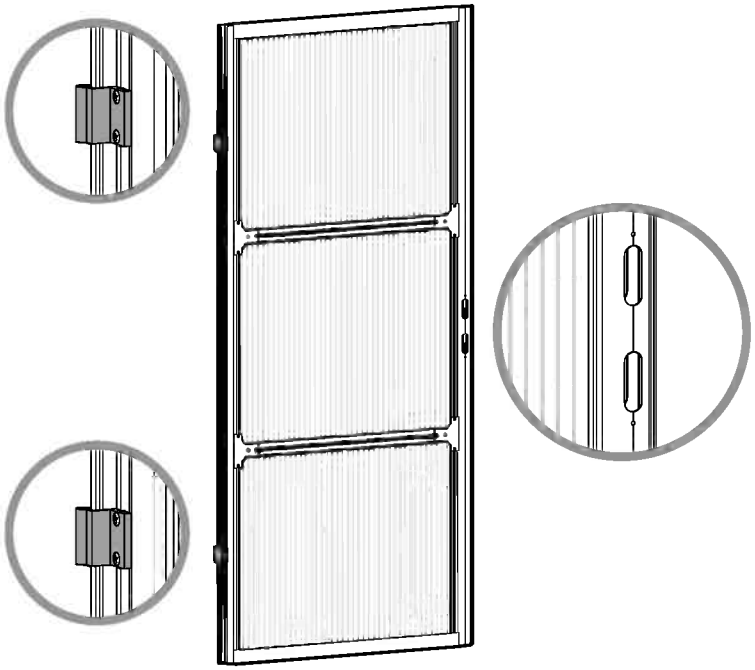


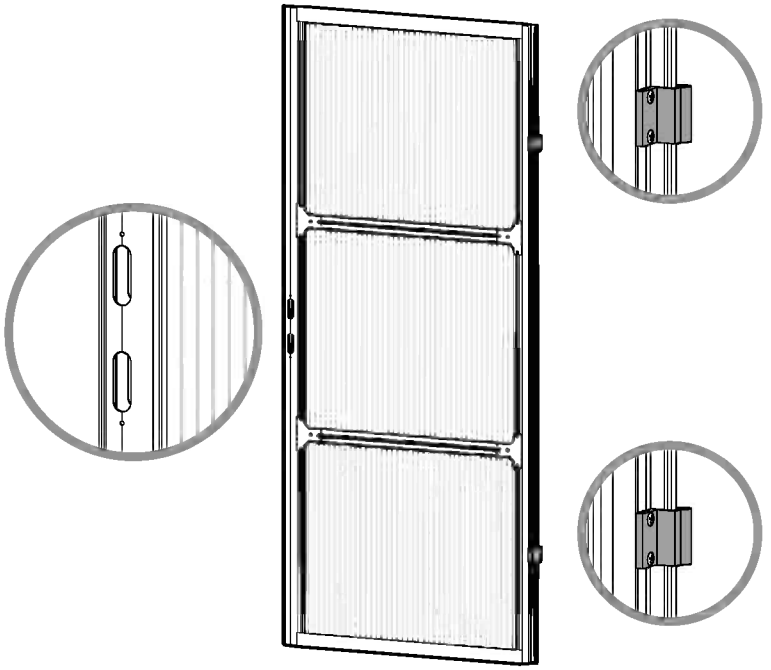


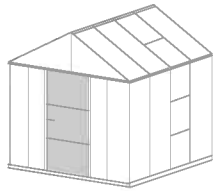




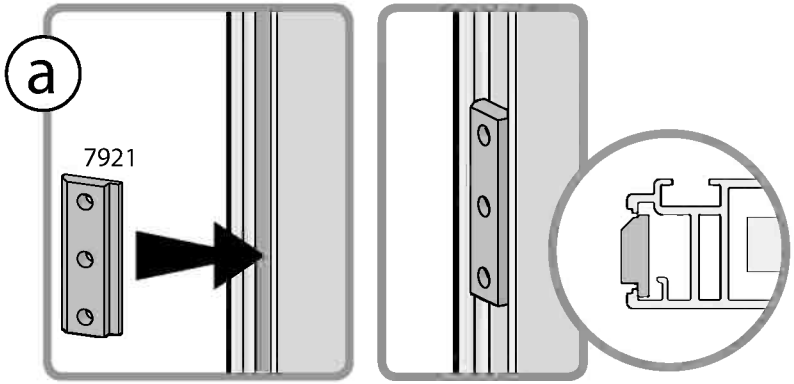


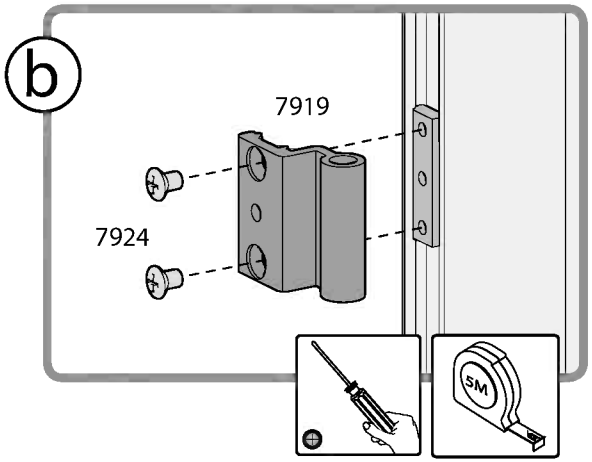


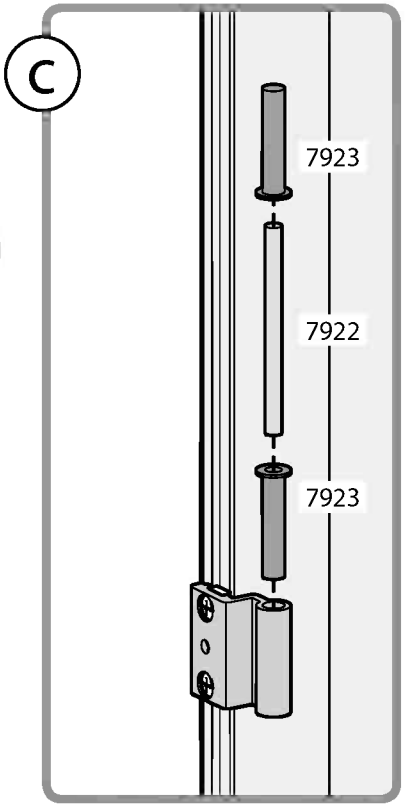


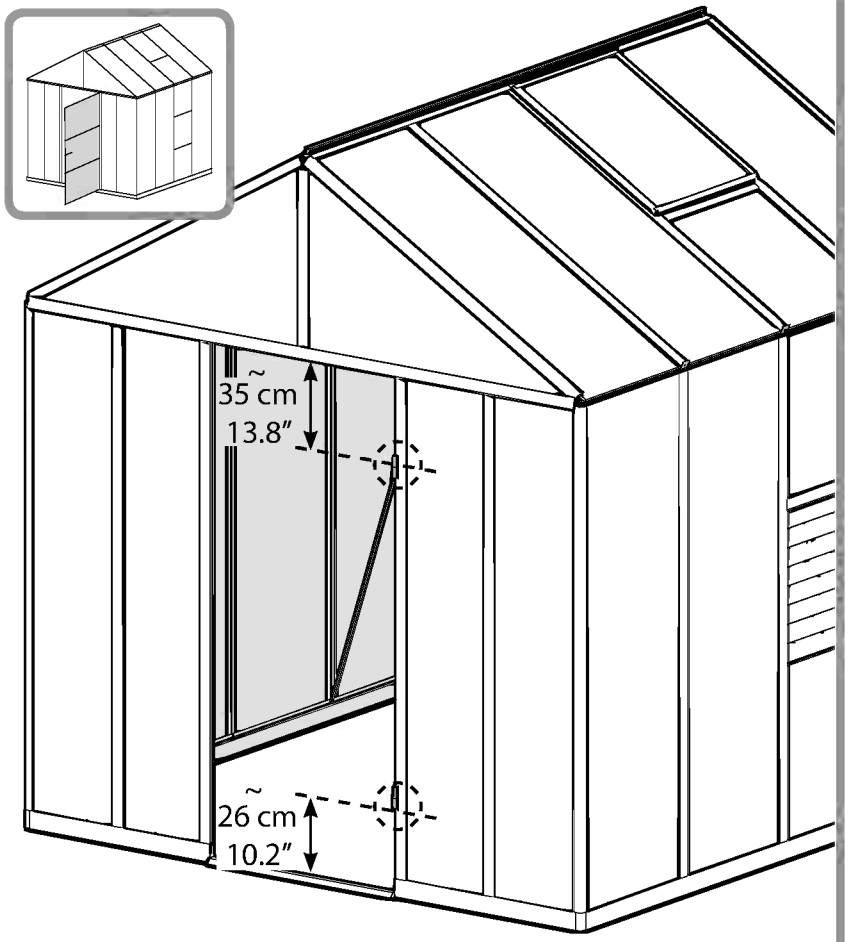


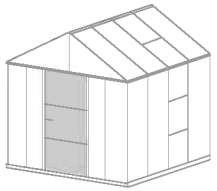
7919 2	7921 2	7923 4	7922 2	7924 4

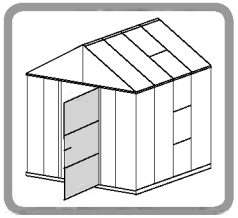




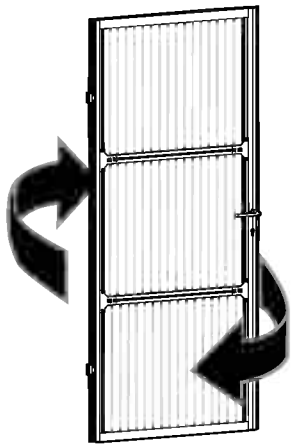




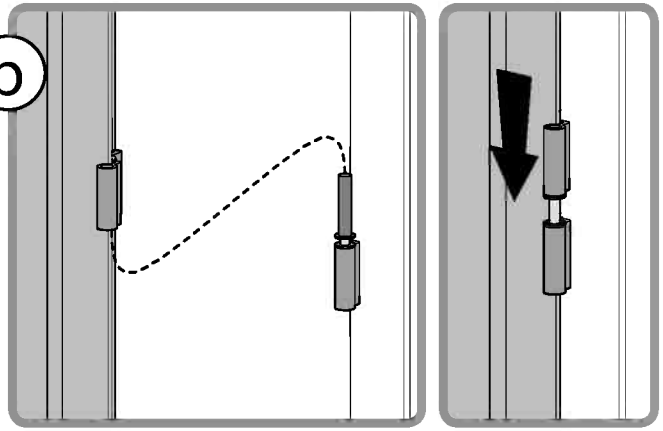




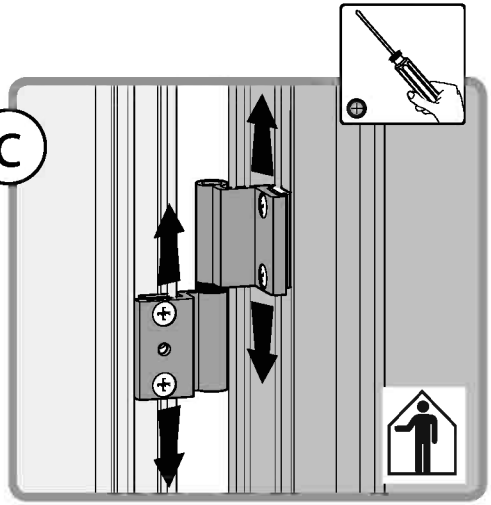
a

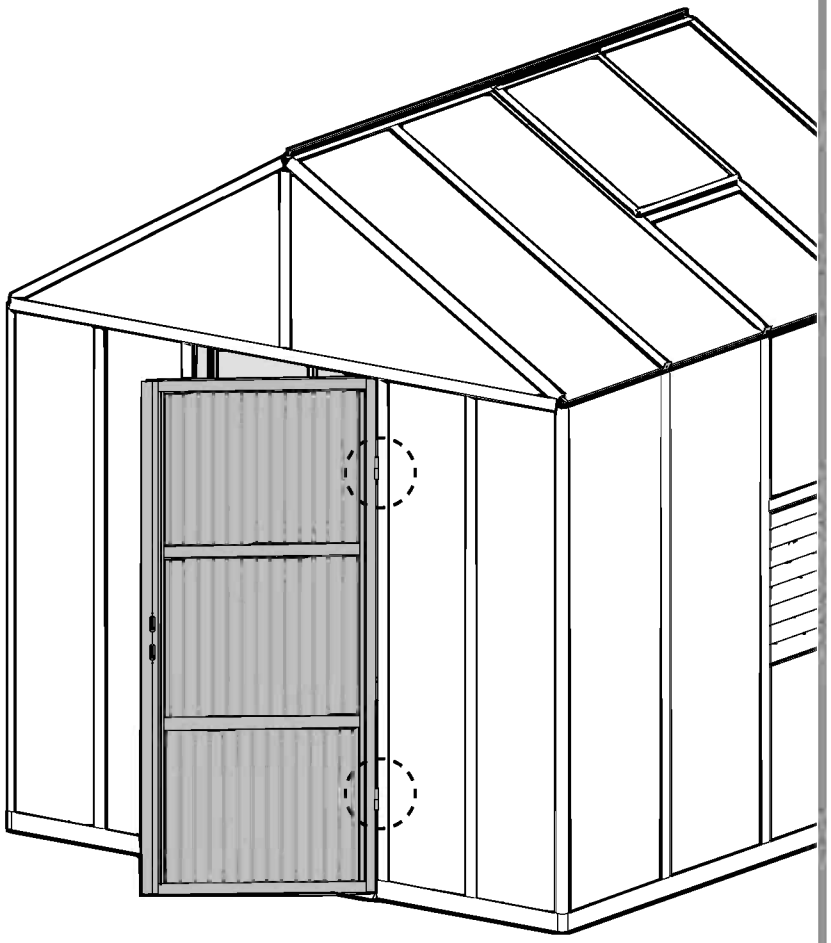


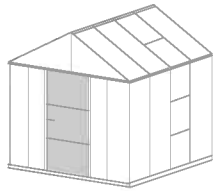
b

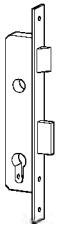


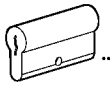
c



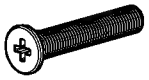




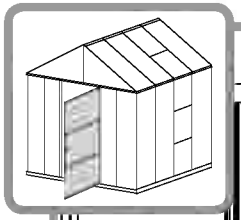
7912 ..... 1 

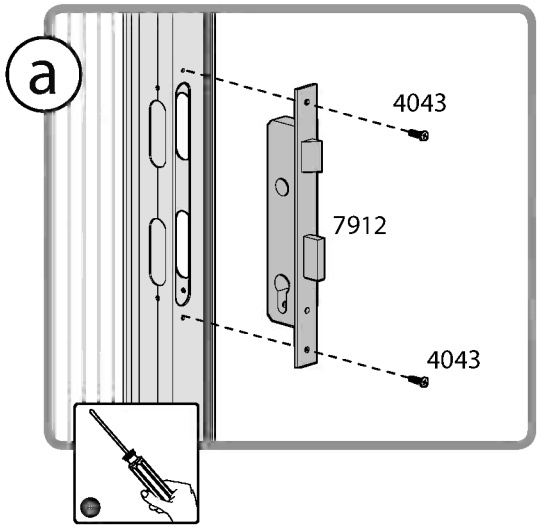
7913 ..... 1 

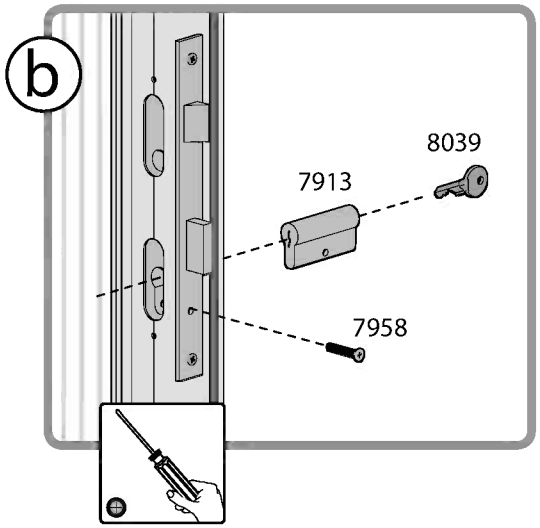
8039 ..... 3 

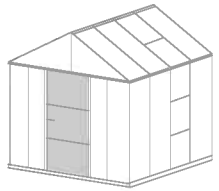
7958 ..... 1 

4043 ..... 2 



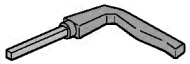






7948 2

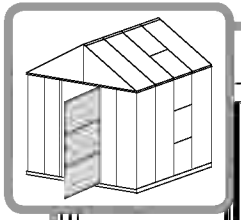


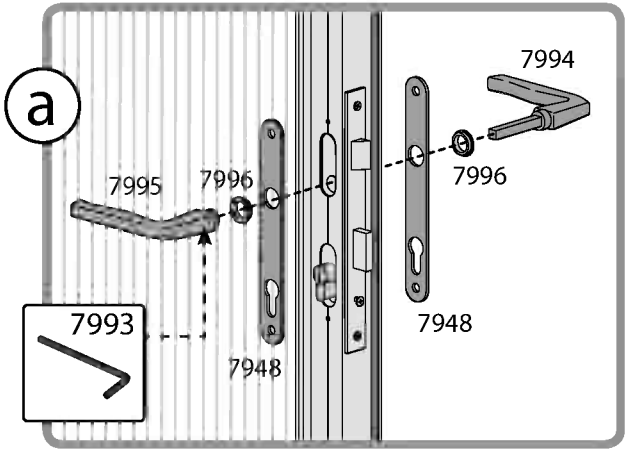
7994 .....  1

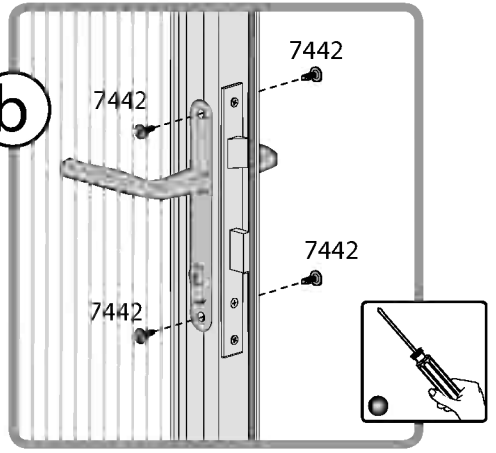
7995 .....  1

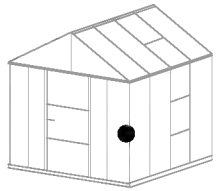
7996 .....  2

7442 .....  4

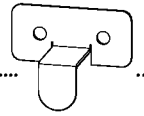




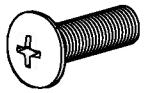




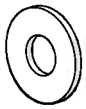
8016 1



4016 2

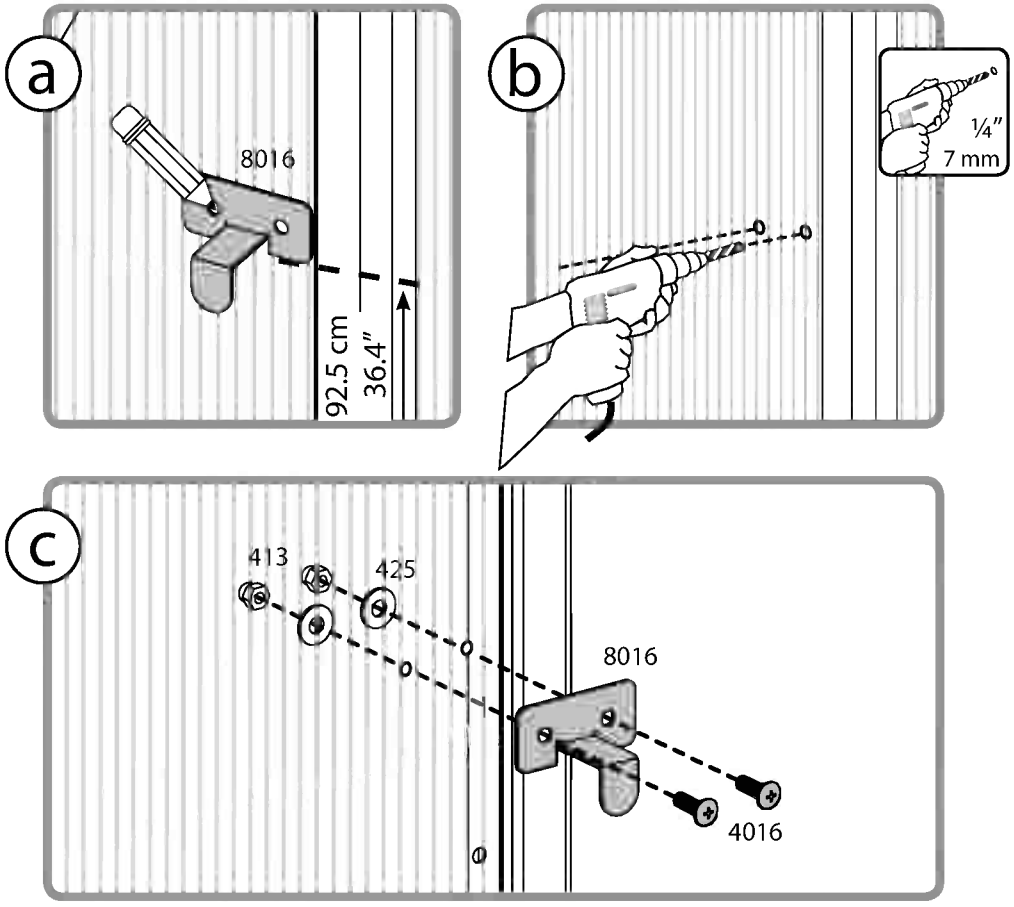


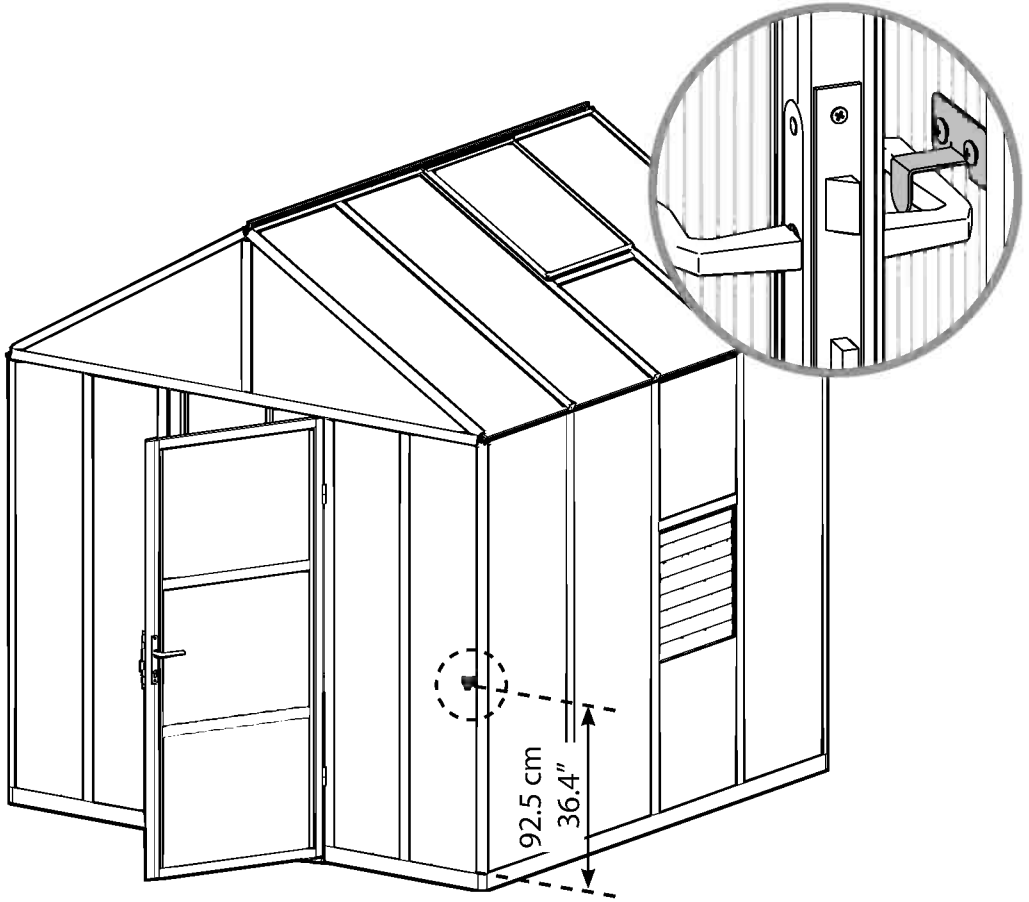
425 2

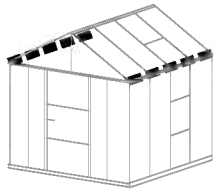


413 2



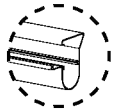


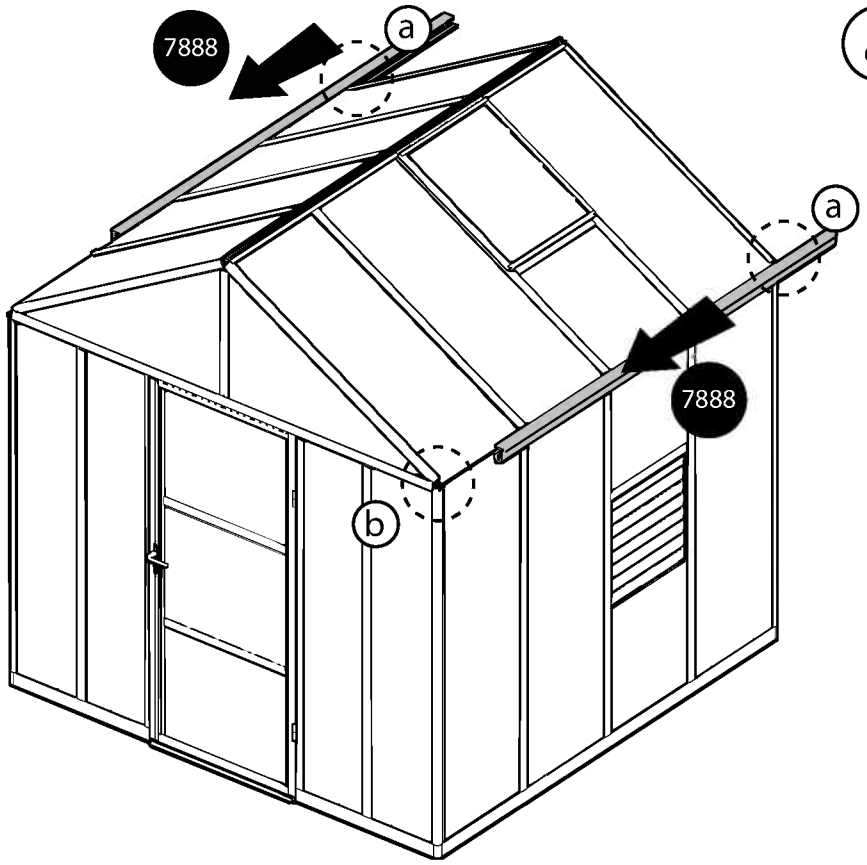


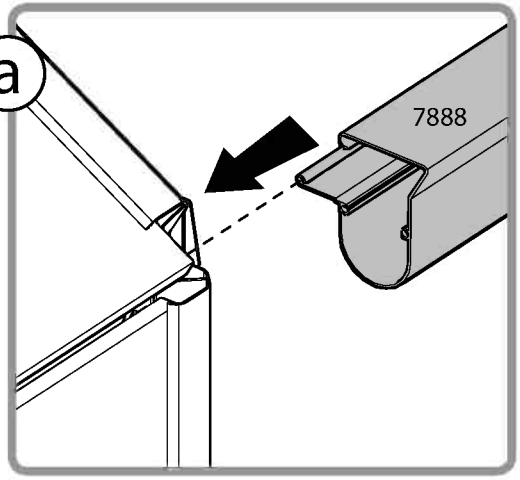


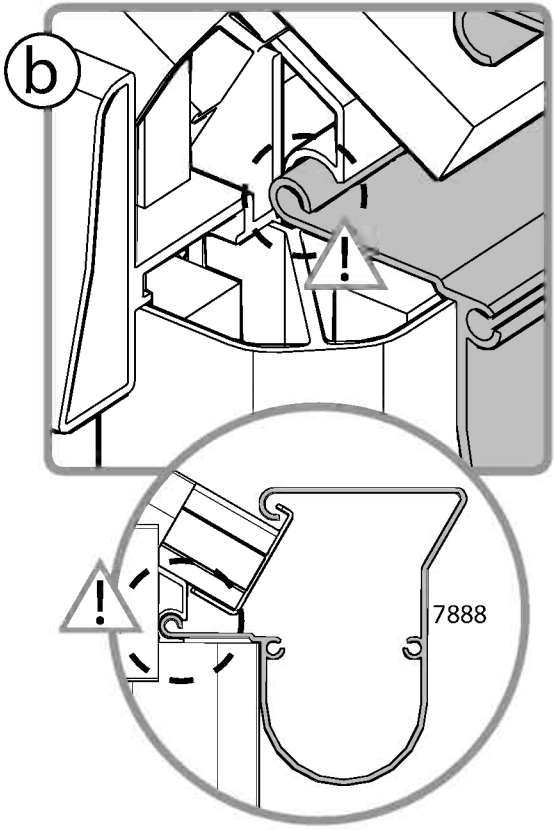
7888 2



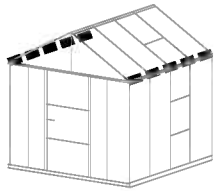


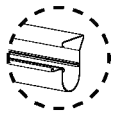




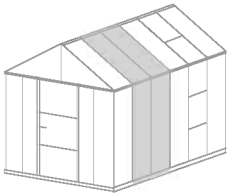


59 For Extension Kit Only



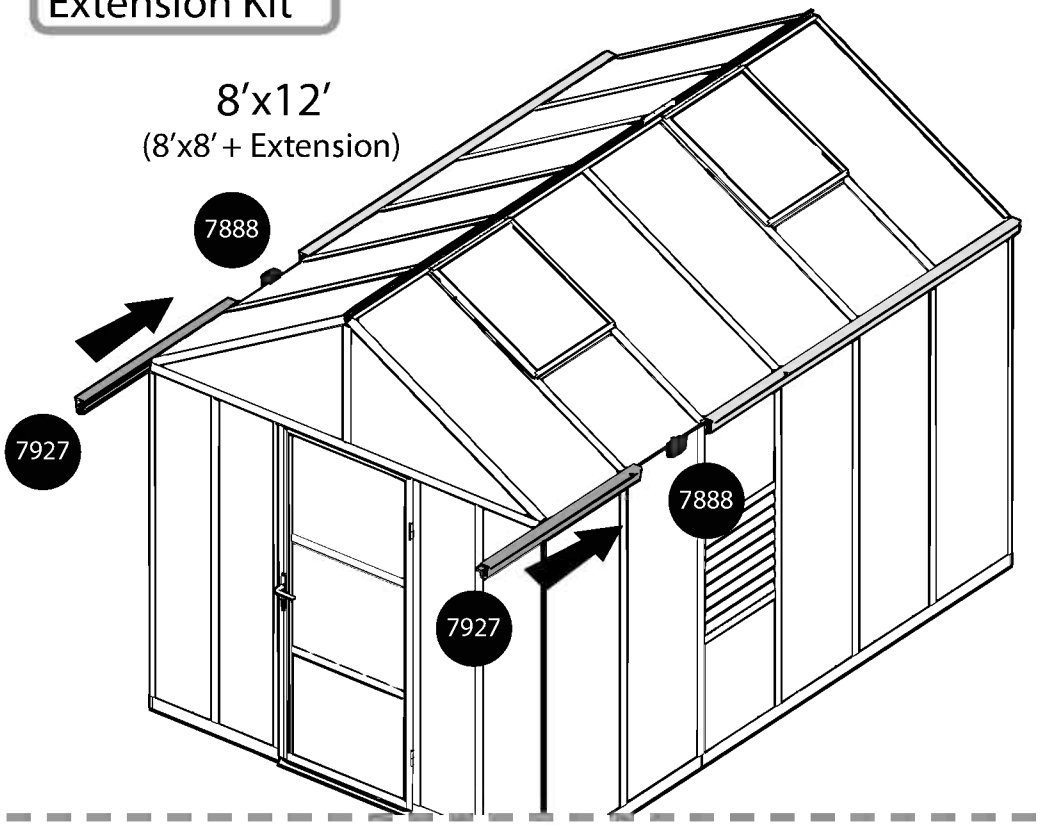
7927 .....   2

7911 .....  2

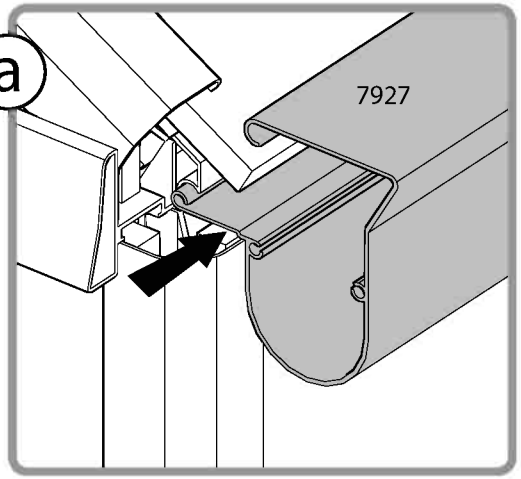


Extension Kit

8'x12'
(8'x8' + Extension)

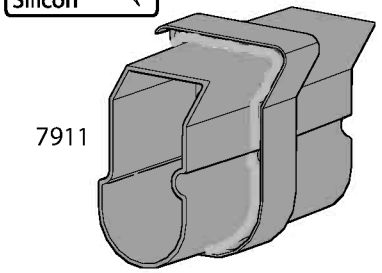


a

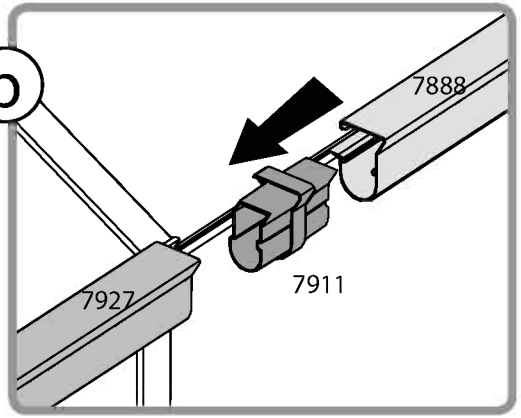


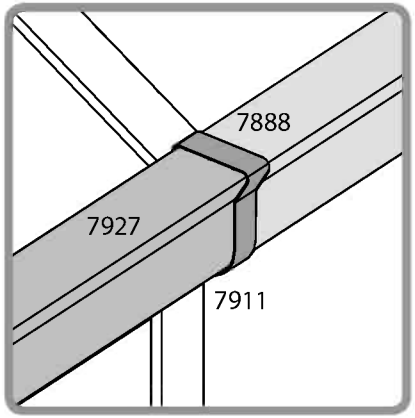
Optional:

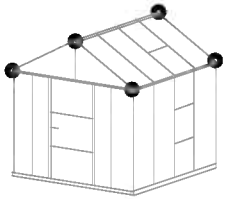




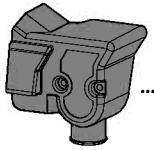
b

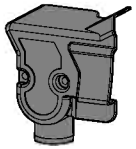


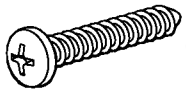




7908 .....  2

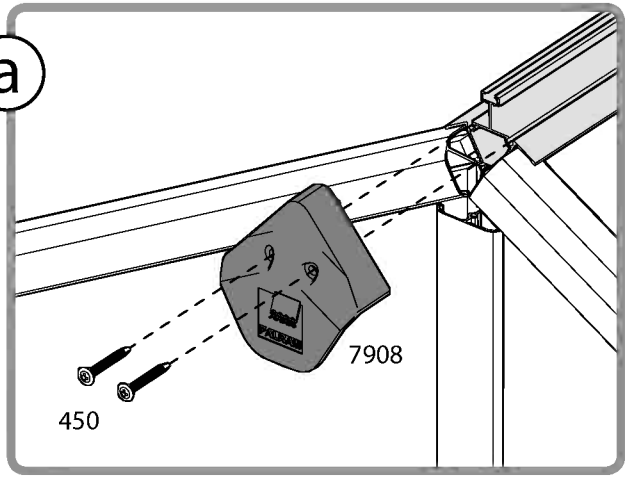
7909 .....  2

7910 .....  2

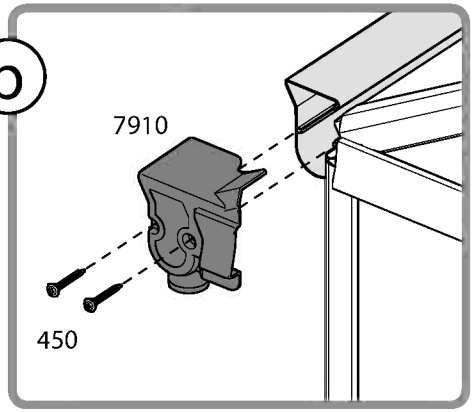
450 .....  12



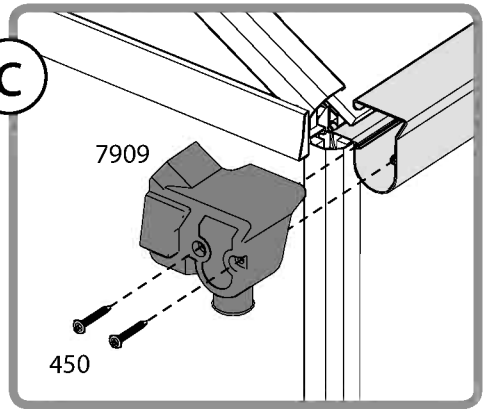
a

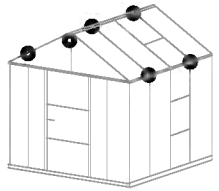


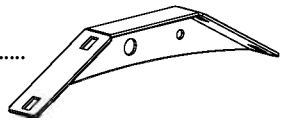
b



c





8037 .....  6

466 .....  24

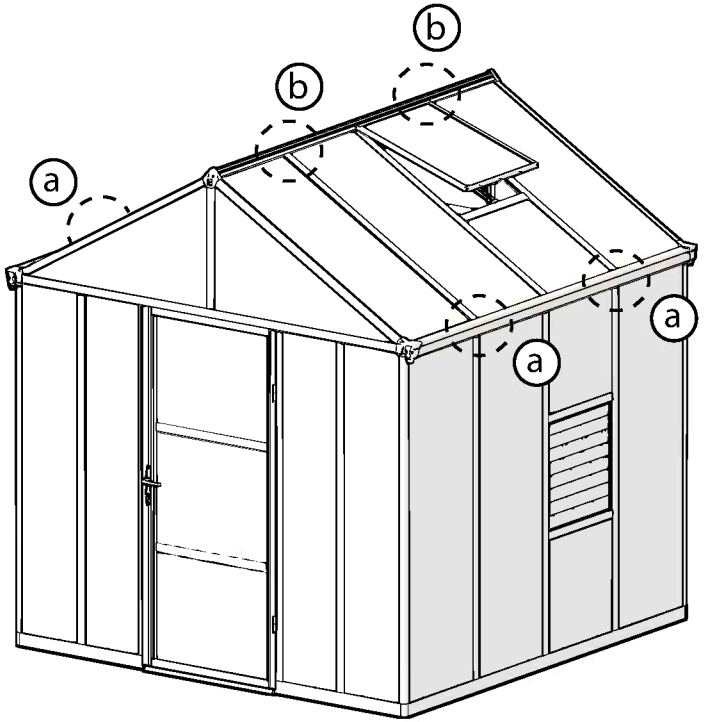
461 .....  24

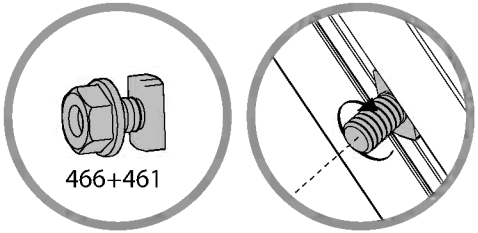
Extension Kit

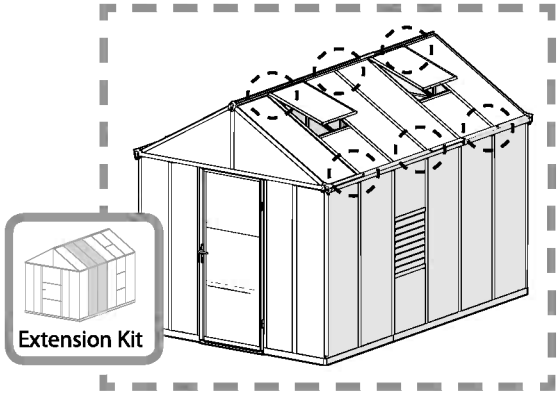
8037 ..... +3

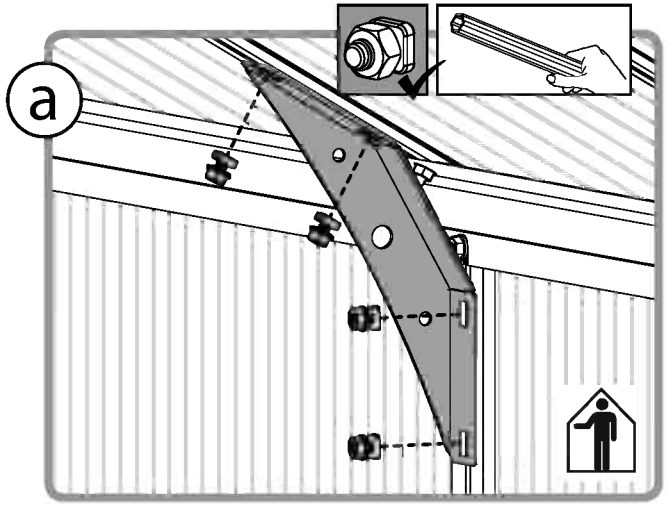
466 ..... +12

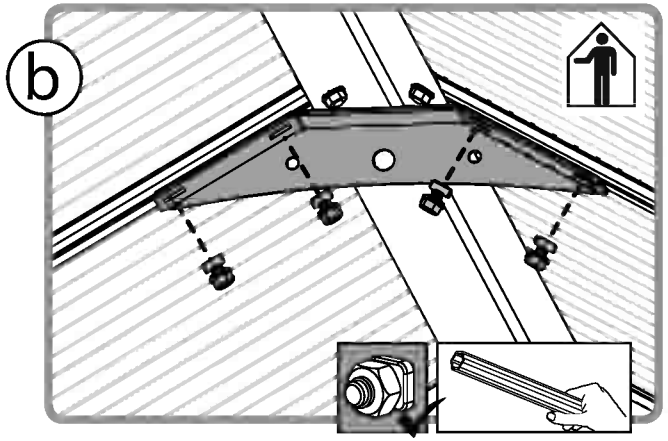
461 ..... +12

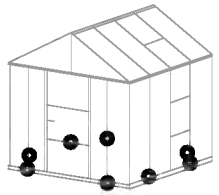


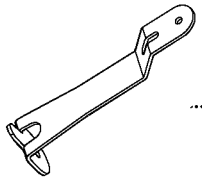








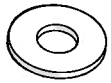


8038 .....  8

466 .....  16

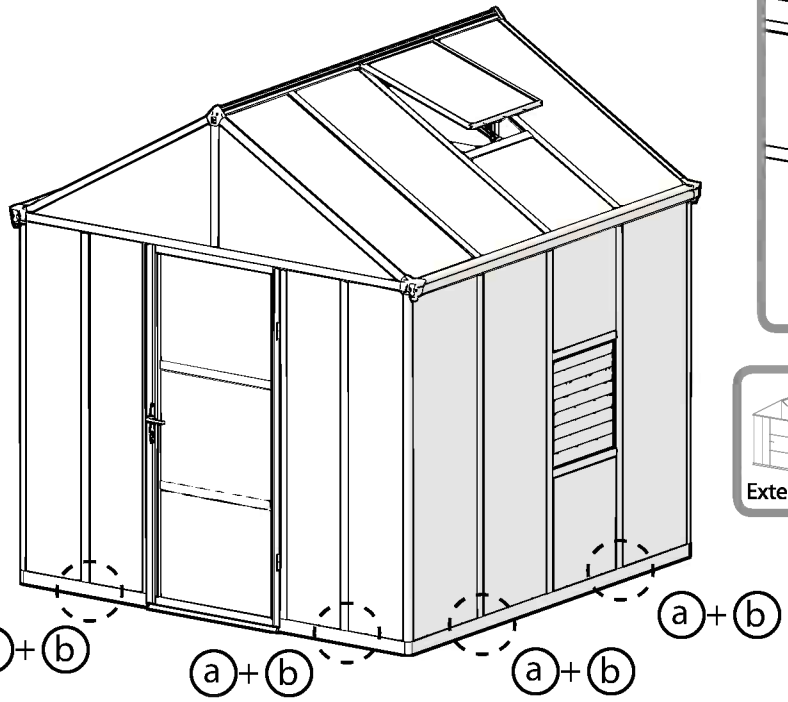
4000 .....  8

4010 .....  8

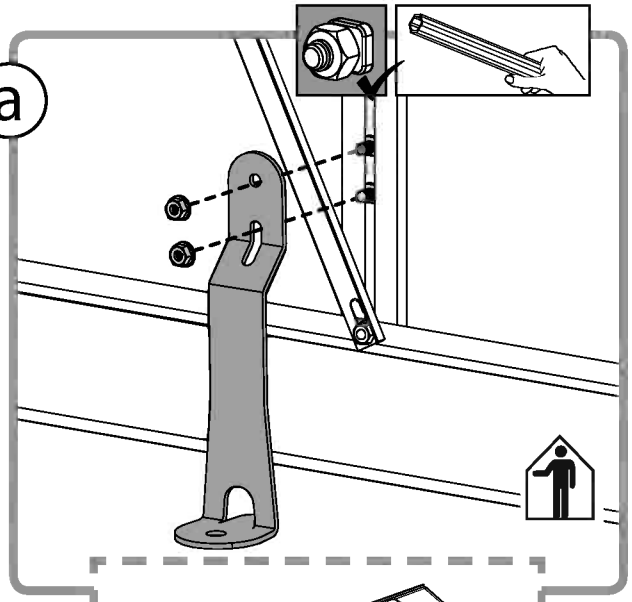
433 .....  8

Extension Kit

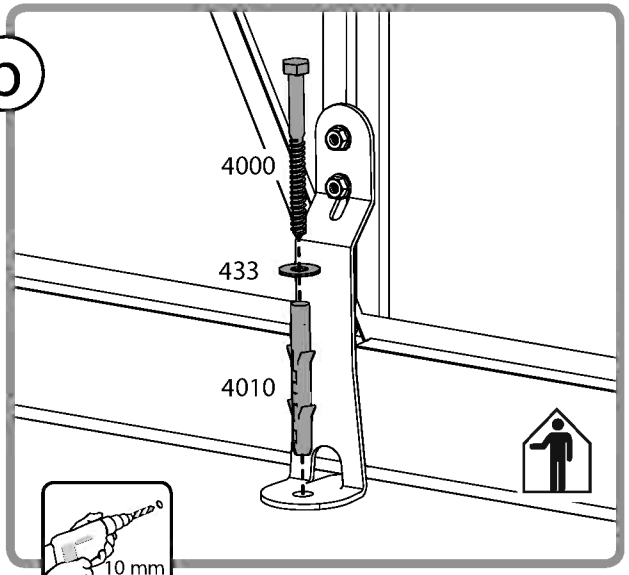
8038 ..... +2
466 ..... +4
433 ..... +4
4000 ..... +4
4010 ..... +4



a



b



Extension Kit

