Malibu - Cabin Bed

Assembly Instructions - Please keep for future reference

268/5038
275/4433
278/5433
275/7557
249/2032
280/3315

WARNING
NOT SUITABLE FOR CHILREN UNDER 4 YEARS OF AGE .

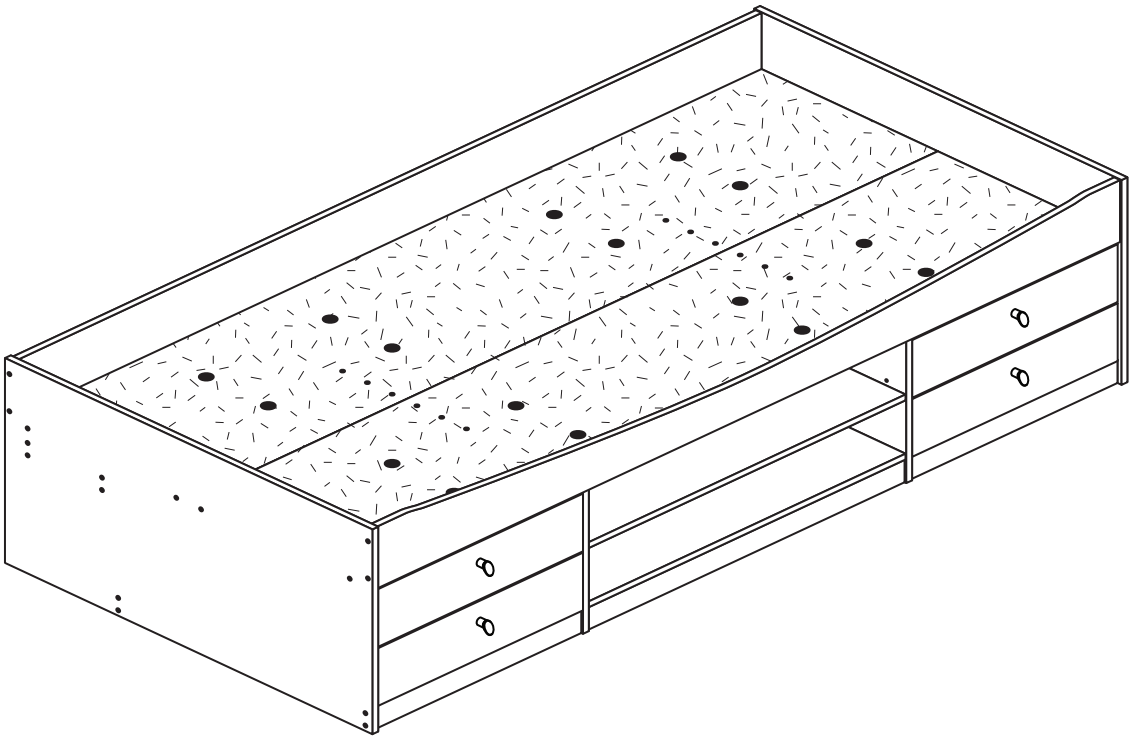

Dimensions
Width - 195cm
Depth - 95cm
Height - 53cm

MADE IN BRITAIN

Important - Please read these instructions fully before starting assembly

If you need help or have damaged or missing parts, call the **Customer Helpline: 08456 400800**

Issue 1 - 08/07/14

Safety and Care Advice

Important - Please read these instructions fully before starting assembly

• ***Warning:*** This unit weighs approximately 66kgs.
Please lift with care.

• Check you have all the components and tools listed on pages 2 and 3.

• Remove all fittings from the plastic bags and separate them into their groups.

• Keep children and animals away from the work area, small parts could choke if swallowed.

• Parts of the assembly will be easier with 2 people.

• Make sure you have enough space to layout the parts before starting.

• Do not stand or put weight on the product, this could cause damage.

• Assemble the item as close to its final position (in the same room) as possible.

• Assemble on a soft level surface to avoid damaging the unit or your floor (use opened out unit carton).

• We do not recommend the use of power drill/drivers ***for inserting screws***, as this could damage the unit. Only use hand screwdrivers.

• **Safety note:** If there is any chance of this unit being pulled over by children etc. it is recommended that the unit is secured to a wall using suitable fixings (not supplied).

• Dispose of all packaging carefully and responsibly.

Care and maintenance

• Only clean using a damp cloth and mild detergent, do no use bleach or abrasive cleaners.

• This product should not be discarded with household waste. Take to your local authority waste disposal centre.

Tools required

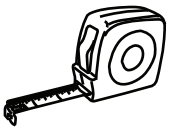

Rule

Cross-head screwdriver

Scissors

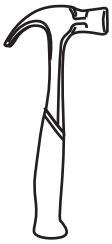

Hammer

Eye protection (when using a hammer or drill)

IMPORTANT
On a regular basis please check that the screws and fittings have not become loose as this could present a potential choke hazard.

Note: If required the next page can be cut out and used as reference throughout the assembly. Keep this page with these instructions for future reference.

Components - Panels

If you have damaged or missing components, call the **Customer Helpline: 08456 400800** *quoting the reference numbers below*

Please check you have all the panels listed below

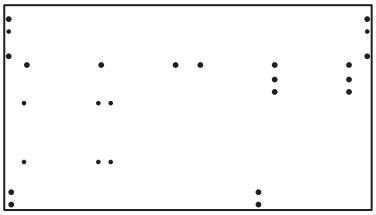

1 Left End *(D2931A)*
(949 x 529mm)

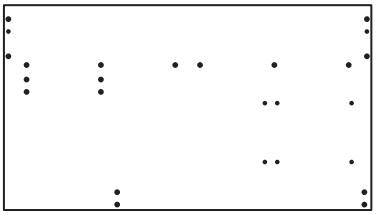

2 Right End *(D2936A)*
(949 x 529mm)

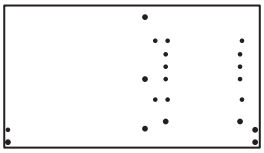

4 Left Upright *(D2937A)*
(367 x 660mm)

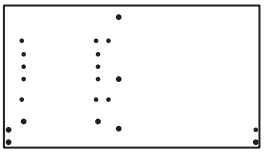

5 Right Upright *(D2929A)*
(367 x 660mm)

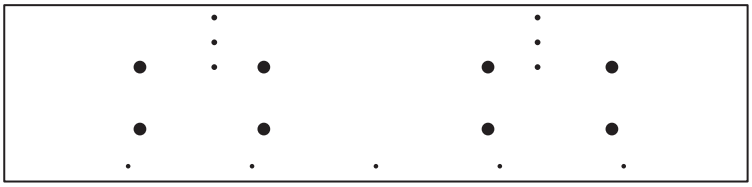

7 Base *(D2928A)*
(1920 x 455.5mm) x 2

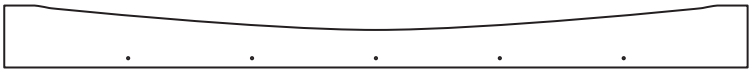

11 Front Rail *(D2938A)*
(1920 x 160mm)

12 Support Rail *(D2939A)*
(1920 x 92mm) x 2

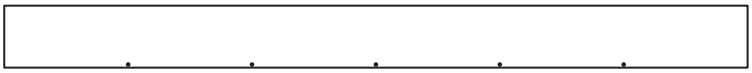

13 Back Rail *(D2926A)*
(1920 x 160mm)

17 Drawer Back *(W502-124)*
(502 x 124mm) x 4

18 Drawer Base *(T513-367)*
(513 x 367mm) x 4

3 Horizontal *(D2932A)*
(820 x 287mm)

6 Back *(D2927A)*
(820 x 367mm)

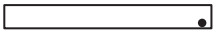

8 Left Plinth *(D2934A)*
(535 x 60mm) x 2

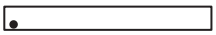

9 Right Plinth *(D2935A)*
(535 x 60mm) x 2

10 Middle Plinth *(D2933A)*
(820 x 60mm)

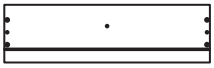

14 Drawer front *(D2930A)*
(531 x 149mm) x 4

15 Left Drawer Side *(W370-124LH)*
(370 x 124mm) x 4

16 Right Drawer Side *(W370-124RH)*
(370 x 124mm) x 4

19 Shelf *(D3030A)*
(820 x 287mm)

Components - Fittings

If you have damaged or missing components, call the **Customer Helpline: 08456 400800** *quoting the reference numbers below*

Please check you have all the fittings listed below

Note: The quantities below are the correct amount to complete the assembly. In some cases more fittings may be supplied than are required.

A Wooden dowel *(F22)* x 16	**B** Metal dowel *(F901)* x 10	**C** Knock-in Peg *(F171GY)* x 16
D Large wooden dowel *(F40)* x 2	**E** Large locking nut *(F900)* x 6	**F** Small locking nut *(F3)* x 8
G 50mm Screw *(F49)* x 48	**H** 45mm Screw *(F65)* x 10	**I** 25mm Screw *(F50)* x 4
J 13mm Screw *(F79)* x 5	**K** 13mm Screw *(F52)* x 5	**L** 9mm Screw *(F73)* x 16
M 9mm Screw *(F74)* x 8	**N** Plastic Nail *(F91)* x 10	**O** Allen Key *(F36)* x 1
P Wedgefix *(F639)* x 8	**Q** Bracket *(F327)* x 5	**R** Handle *(F631)* x 4
S Drawer runner *(F1004)* x 8		**T** Double metal dowel *(F566)* x 2
U Shelf stud *(F372)* x 4		

Ruler - Use this ruler to help correctly identify the screws

mm 10 20 30 40 50 60 70 80 90 100 110 120 130 140 150 160 170

Assembly Instructions

If you have damaged or missing components, call the **Customer Helpline: 08456 400800** *quoting the reference numbers below*

Step 1

Prepare the 4 drawer fronts

Screw 2 metal dowels B into each of the 4 drawer fronts 14.

Note: Tighten the metal dowels up fully against the panels.

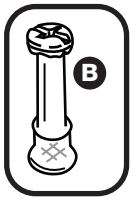

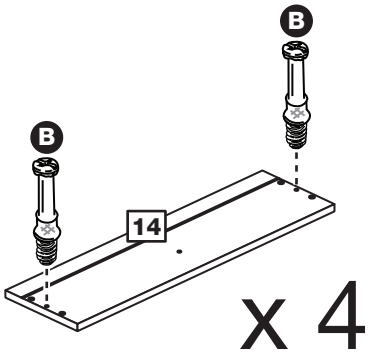

Step 2

Prepare 4 pairs of drawer sides

Insert a small locking nut F into the hole shown on the left drawer side 15 and the right drawer side 16.

Note: The arrow on the locking nut **must** point towards the hole in the edge of the panel.

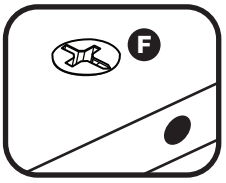

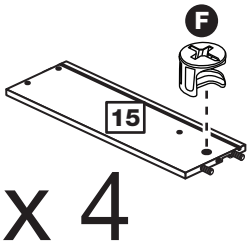

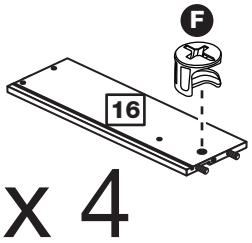

Step 3

Attach the drawer sides to the drawer fronts

Push the left drawer sides 15 and right drawer sides 16 onto the back of the 4 drawer fronts 14.

Turn the small locking nuts F on the left drawer side 15 and right drawer side 16.

Note: Turn the locking nuts F clockwise to secure panels - more than 1/2 a turn.

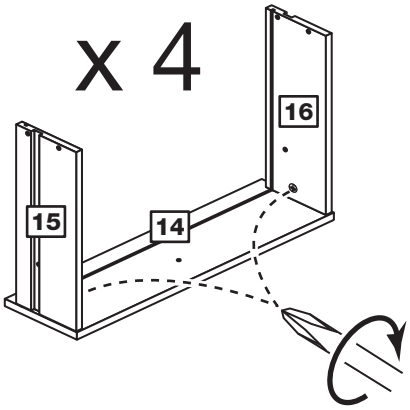

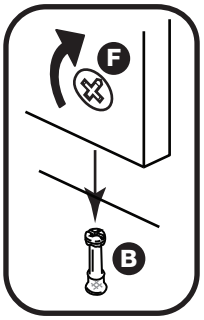

Step 4

Fit the drawer base

Slide the drawer base 18 down the grooves in the drawer sides 15 and 16 and down into the groove in the drawer front 14.

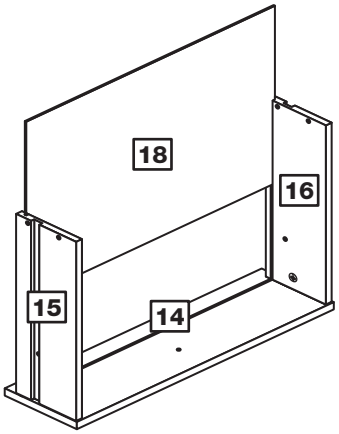

x 4

Step 5

Fit the drawer back

Fit the drawer back 17 between the drawer sides 15 and 16. Make sure that the drawer base 18 fits into the groove in the drawer back 17.

Hold the drawer back 17 in position and tap the knock-in pegs C through the holes in the drawer sides 15 and 16.

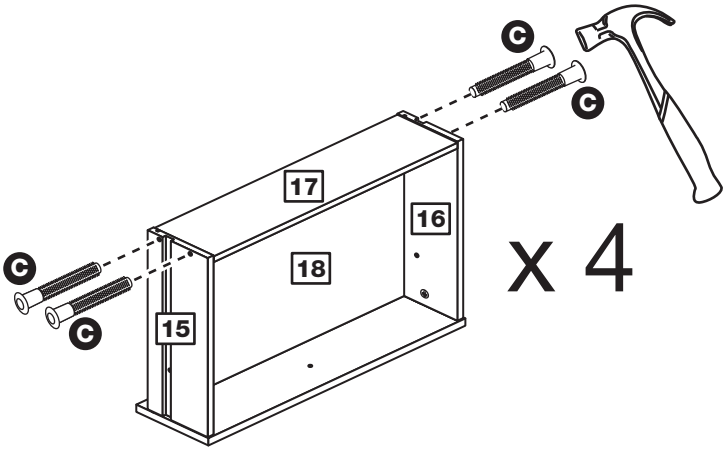

x 4

Step 6

Attach the handles

Attach a handle R to each of the drawer fronts 14 using screw I.

Note: Do not overtighten the screw.

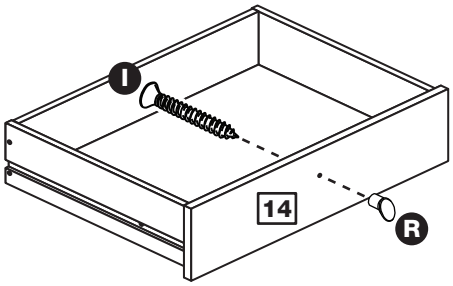

x 4

Step 7

Fit the wedgefixes

Turn the drawer assemblies over and slide 2 wedgefixes P into the front and back grooves, as shown, and tighten up the screws.

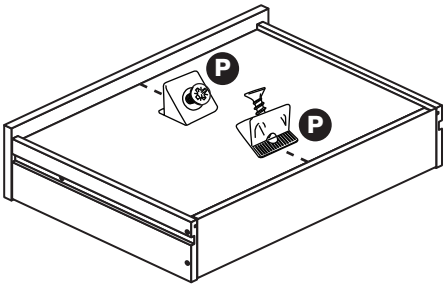

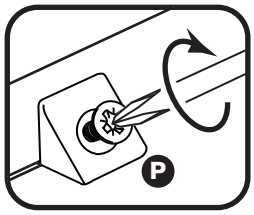

x 4

Step 8

Prepare the left upright

a: Tap 2 wooden dowels (A) into the left upright [4].

Screw a metal dowel (B) into the left upright [4].

Place 2 runners (S) on the left upright [4] as shown. Slide back the top of runner and use the 2nd hole from the front to fit the 1st screw (L).

b: Slide the runner (S) back the other way and fit the 2nd screw (L) into the corresponding hole in the left upright [4].

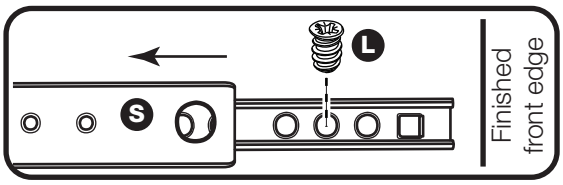

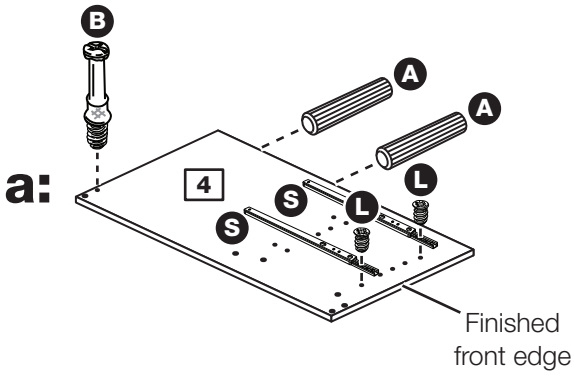

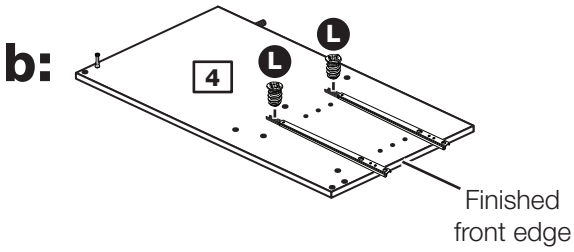

Step 9

Prepare the right upright

a: Tap 2 wooden dowels (A) into the right upright [5].

Screw a metal dowel (B) into the right upright [5].

Place 2 runners (S) on the right upright [5] as shown. Slide back the top of runner and use the 2nd hole from the front to fit the 1st screw (L).

b: Slide the runner (S) back the other way and fit the 2nd screw (L) into the corresponding hole in the right upright [5].

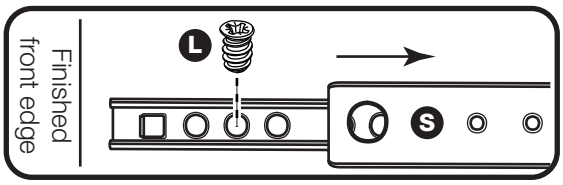

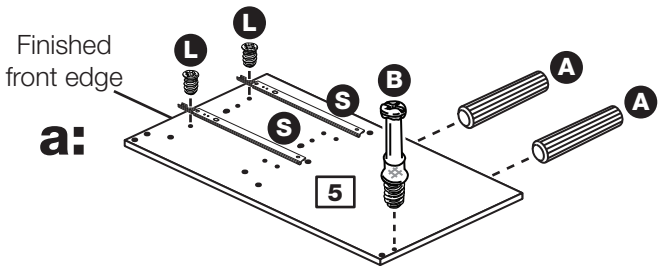

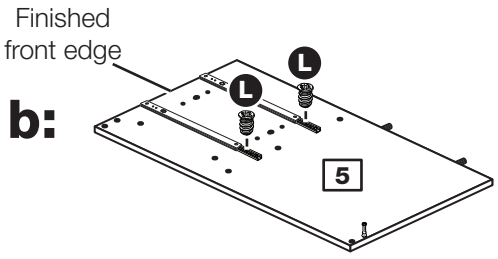

Step 10

Fit the horizontal to the right upright

Fit the horizontal 3 onto the right upright 5 using 2 screws G and the allen key O.

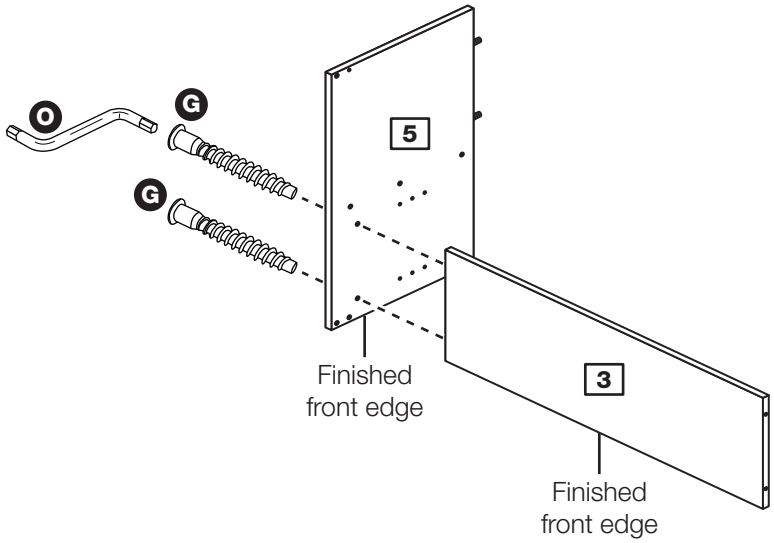

Step 11

Prepare the middle plinth

Insert 2 large locking nuts E into the middle plinth 10.

Note: The arrow on the locking nut **must** point towards the hole in the edge of the panel.

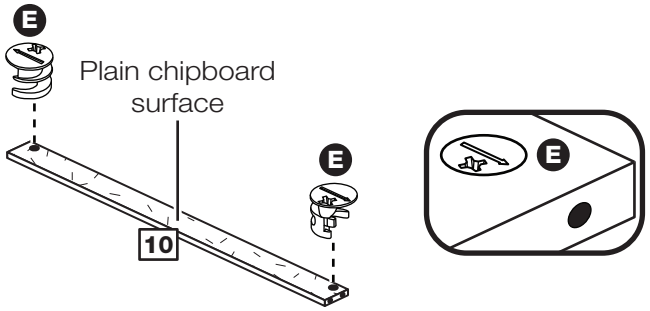

Step 12

Fit the middle plinth

a: Tap a double metal dowel T and a large wooden dowel D through the right upright 5 and into the middle plinth 10 until they ''bottom out".

b: Use a screwdriver to tighten the large locking nut E fitted to the middle plinth 10.

Note: Turn the large locking nuts E as far as they will go - more than 1/2 a turn.

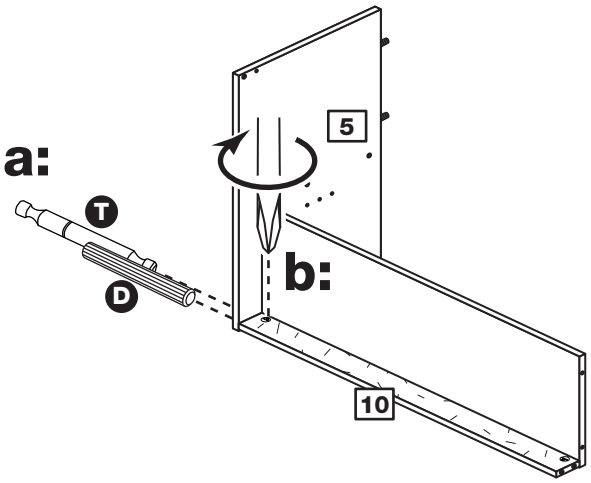

Important: It is critical that the middle plinth is asssembled with the large locking nuts at the top.

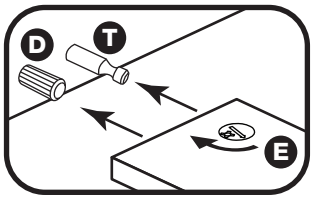

Step 13

Prepare the back

Tap 2 wooden dowels A into the back 6.

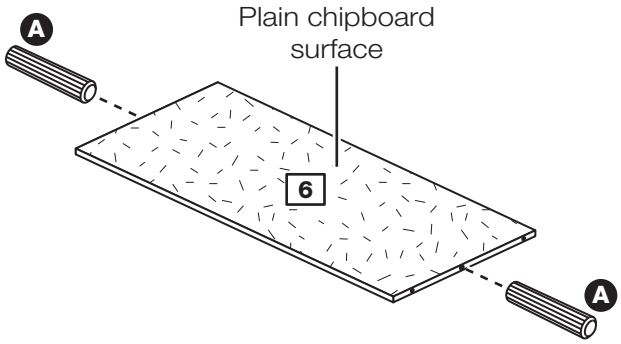

Step 14

Fit the back

Push the back 6 onto the right upright 5 and fix it using 2 screws G and the allen key O.

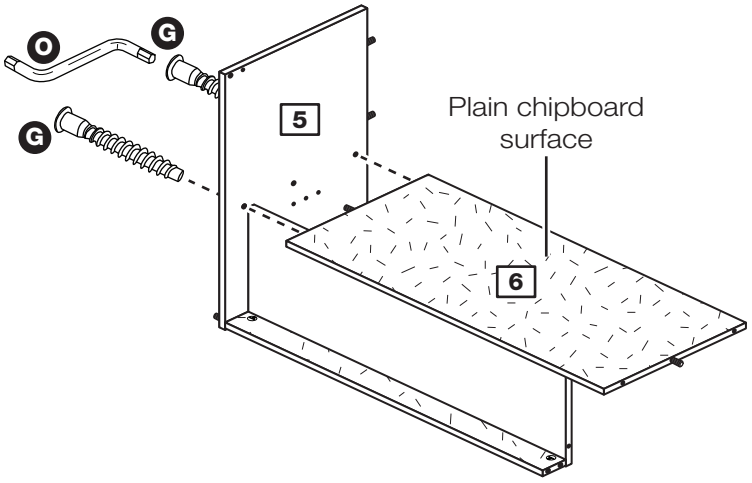

Step 15

Fit the left upright

Push the left upright 4 onto the assembly and fix it using 4 screws G and the allen key O.

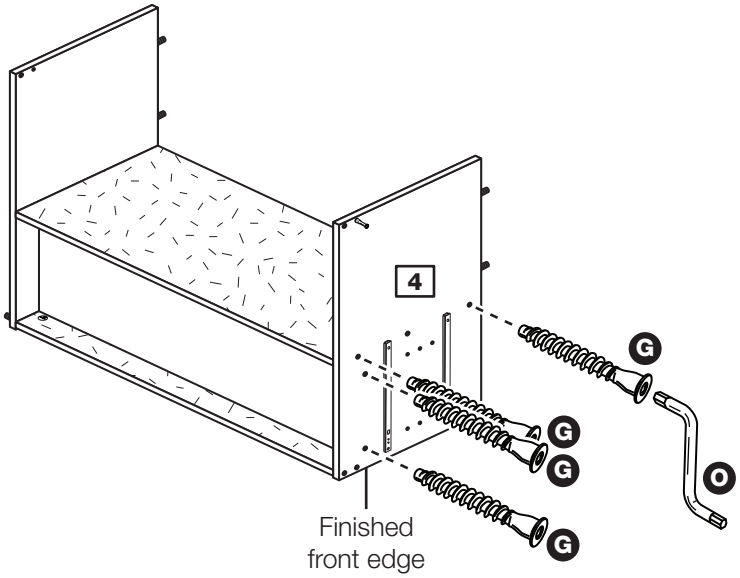

Step 16

Secure the middle plinth to the left upright

a: Tap a double metal dowel T and a large wooden dowel D through the left upright 4 and into the middle plinth 10 until they ''bottom out".

b: Use a screwdriver to tighten the large locking nut E fitted to the middle plinth 10.

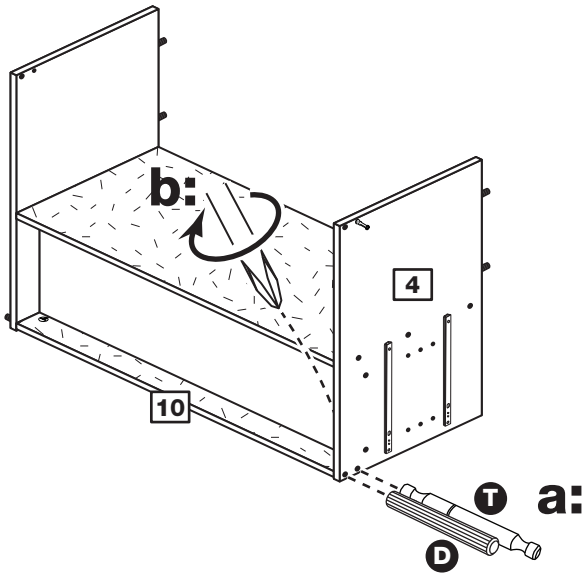

Step 17

Fit the 4 plastic nails

Tap 2 plastic nails N into the bottom edge of each of the uprights 4 and 5.

Carefully stand the assembly up.

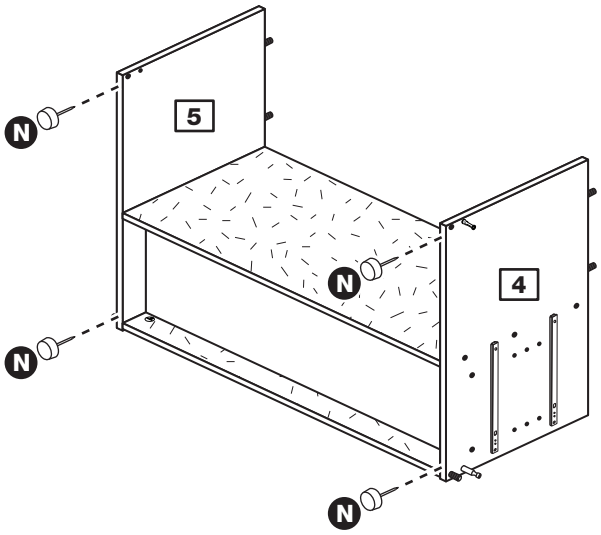

Step 18

Prepare the 2 left plinths

Tap a wooden dowel A into just 1 of the 2 left plinths 8.

Insert a large locking nut E into each of the 2 left plinths 8.

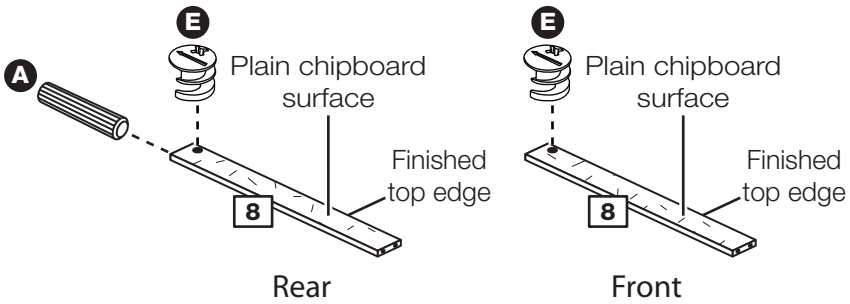

Step 19

Fit the left plinths to the left upright

Push the left plinths 8 onto the left upright 4.

Use a screwdriver to tighten the large locking nuts E fitted to the left plinths 8.

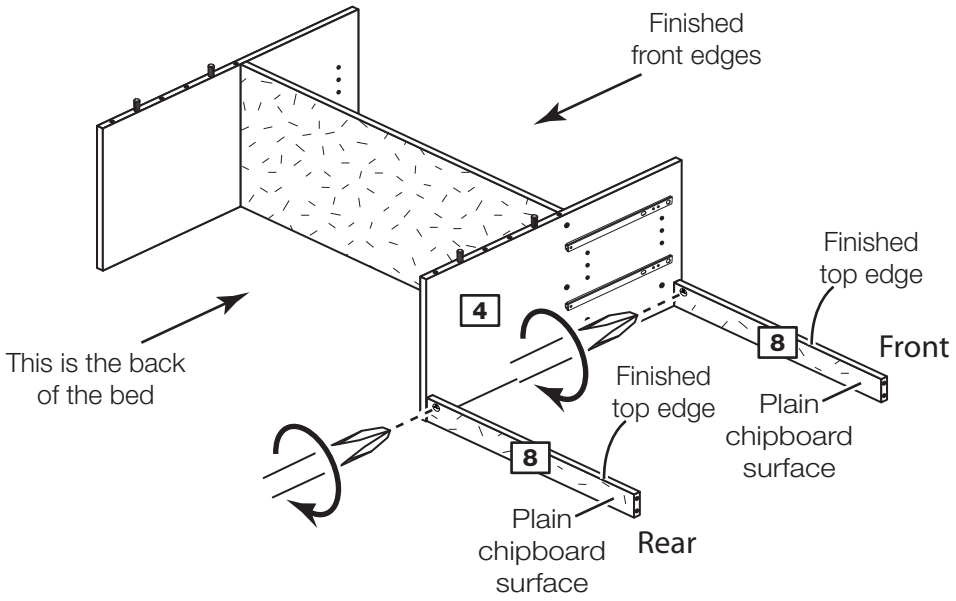

Step 20

Prepare the 2 right plinths

Tap a wooden dowel A into just 1 of the 2 right plinths 9.

Insert a large locking nut E into each of the 2 right plinths 9.

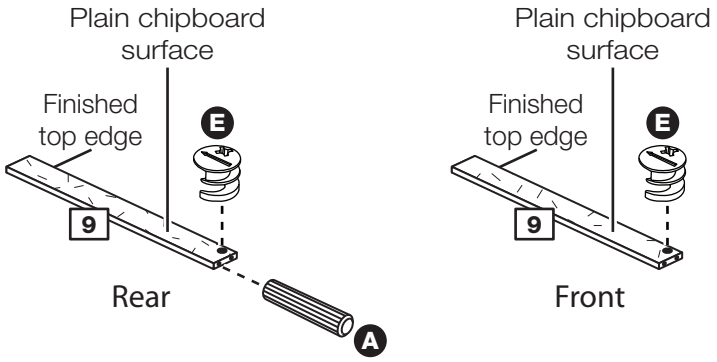

Step 21

Fit the right plinths to the right upright

Push the right plinths 9 onto the right upright 5.

Use a screwdriver to tighten the large locking nuts E fitted to the right plinths 9.

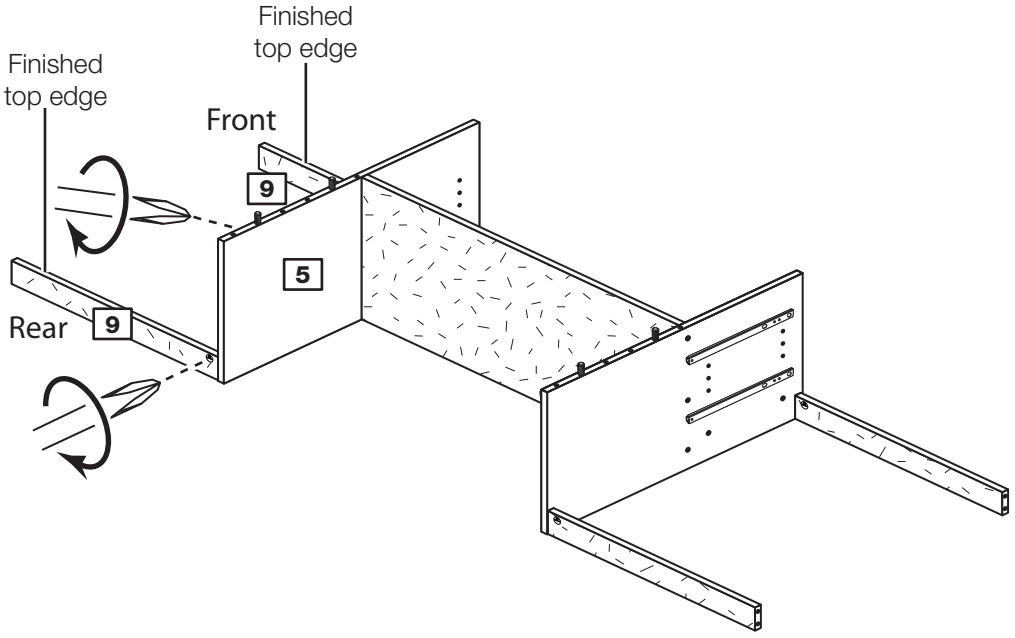

Step 22

Prepare the 2 bases

Tap 2 wooden dowels A into each of the 2 bases 7.

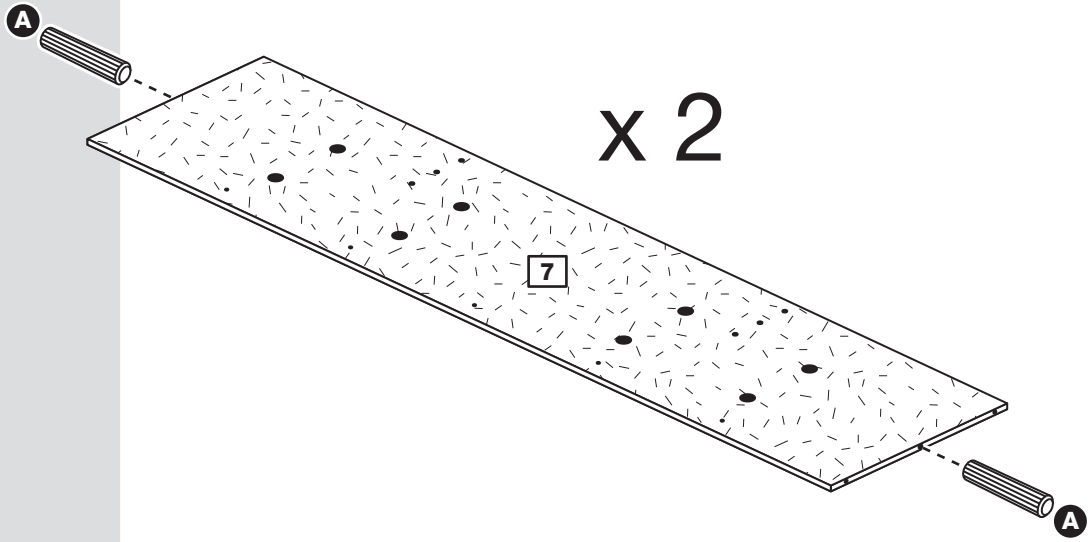

Step 23

Fit a base

Fit a base 7 down onto the 2 uprights 4 and 5 using 4 screws G and the allen key O.

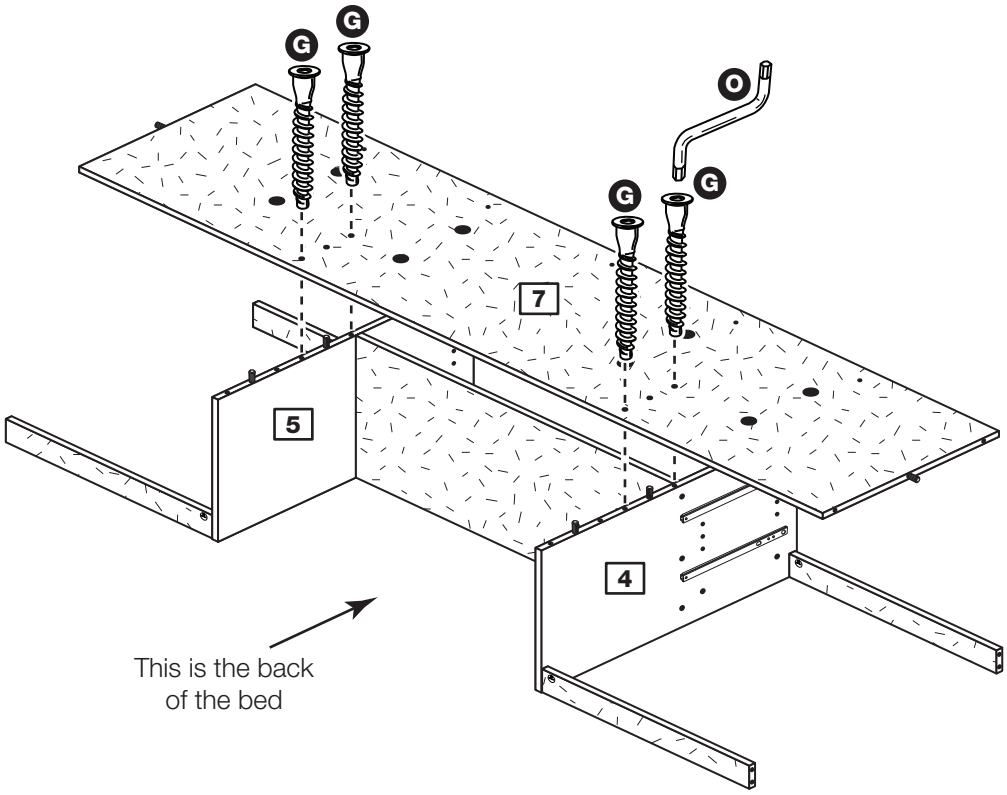

Step 24

Fit the other base

2 people are needed to asssemble this part

Fit the other base 7 down onto the 2 uprights 4 and 5 using 4 screws G and the allen key O.

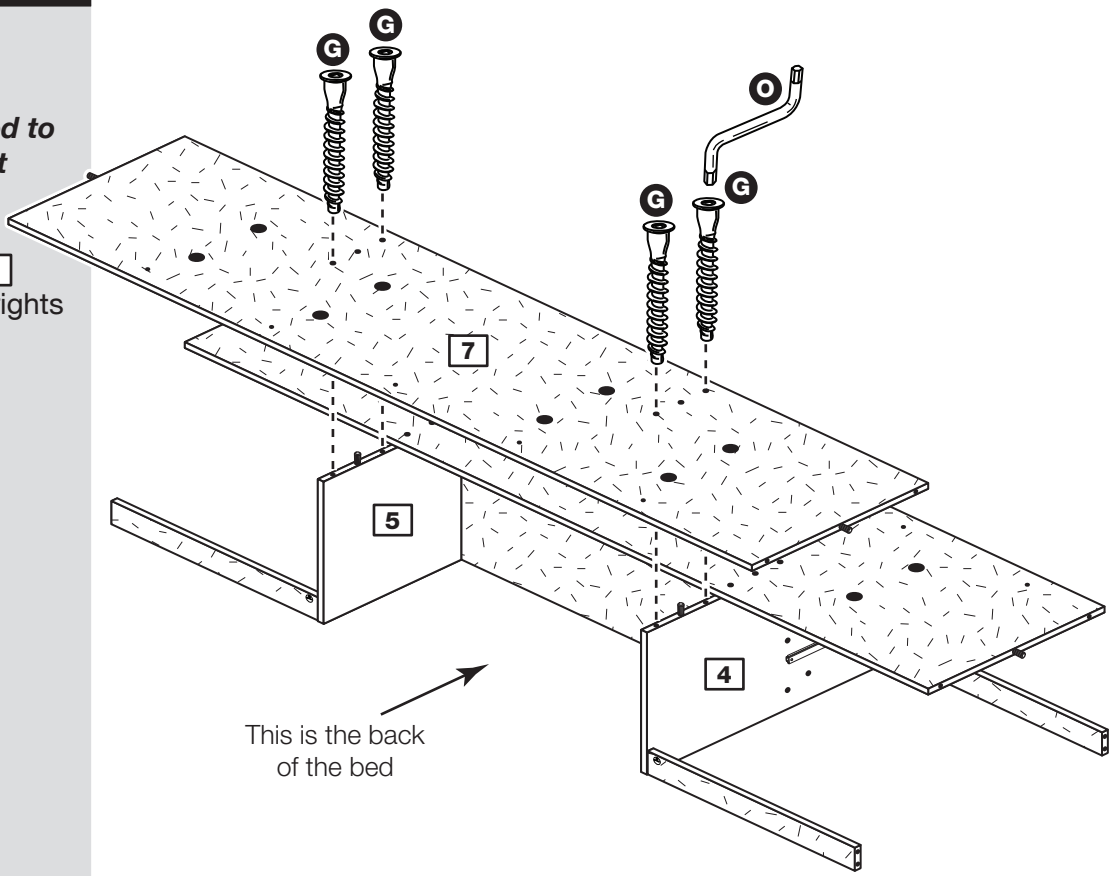

Step 25

Prepare the right end

a: Place 2 runners S on the right end 2 as shown. Slide back the top of runner and use the 2nd hole from the front to fit the 1st screw L.

b: Slide the runner S back the other way and fit the 2nd screw L into the corresponding hole in the right end 2.

Tap 3 plastic nails N into the bottom edge of each of the right end 2.

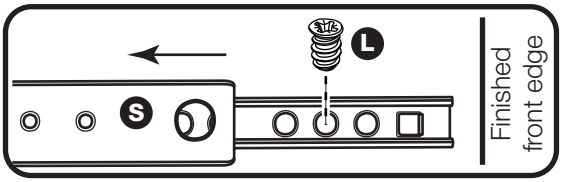

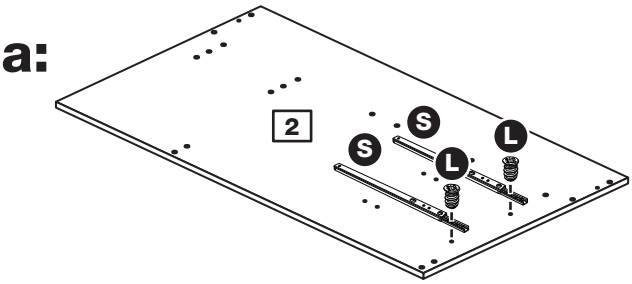

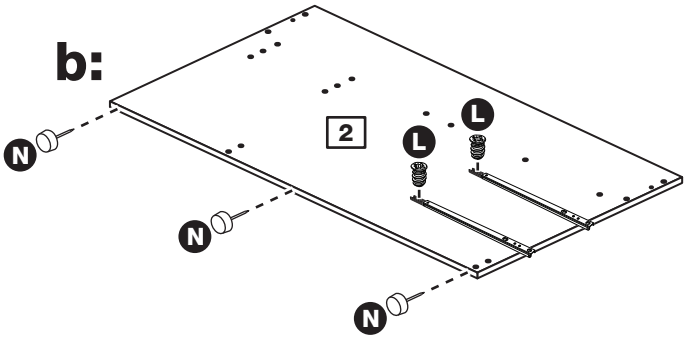

Step 26

Prepare the left end

a: Place 2 runners S on the left end 1 as shown. Slide back the top of runner and use the 2nd hole from the front to fit the 1st screw L.

b: Slide the runner S back the other way and fit the 2nd screw L into the corresponding hole in the left end 1.

Tap 3 plastic nails N into the bottom edge of each of the left end 1.

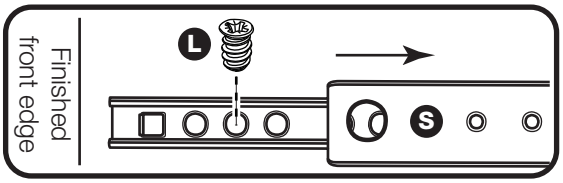

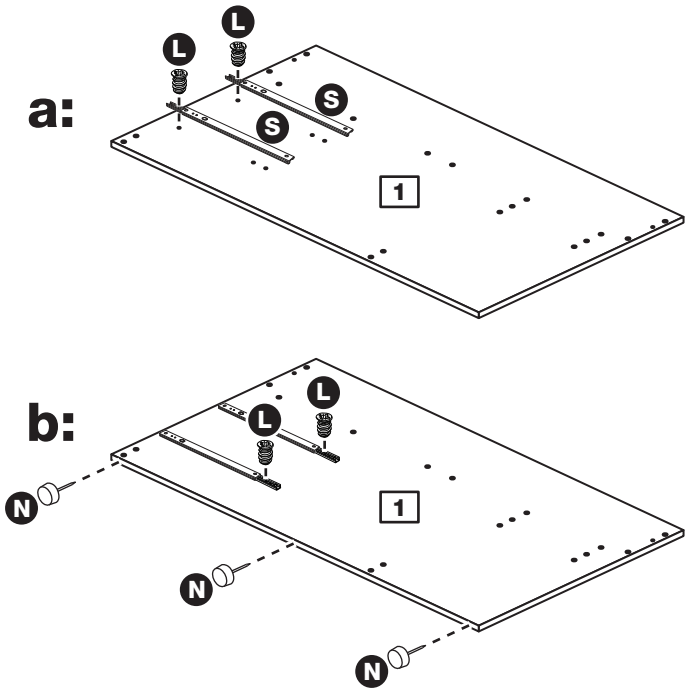

Step 27

Fit the left end

Fit the left end 1 onto the assembly using 8 screws G and the allen key O.

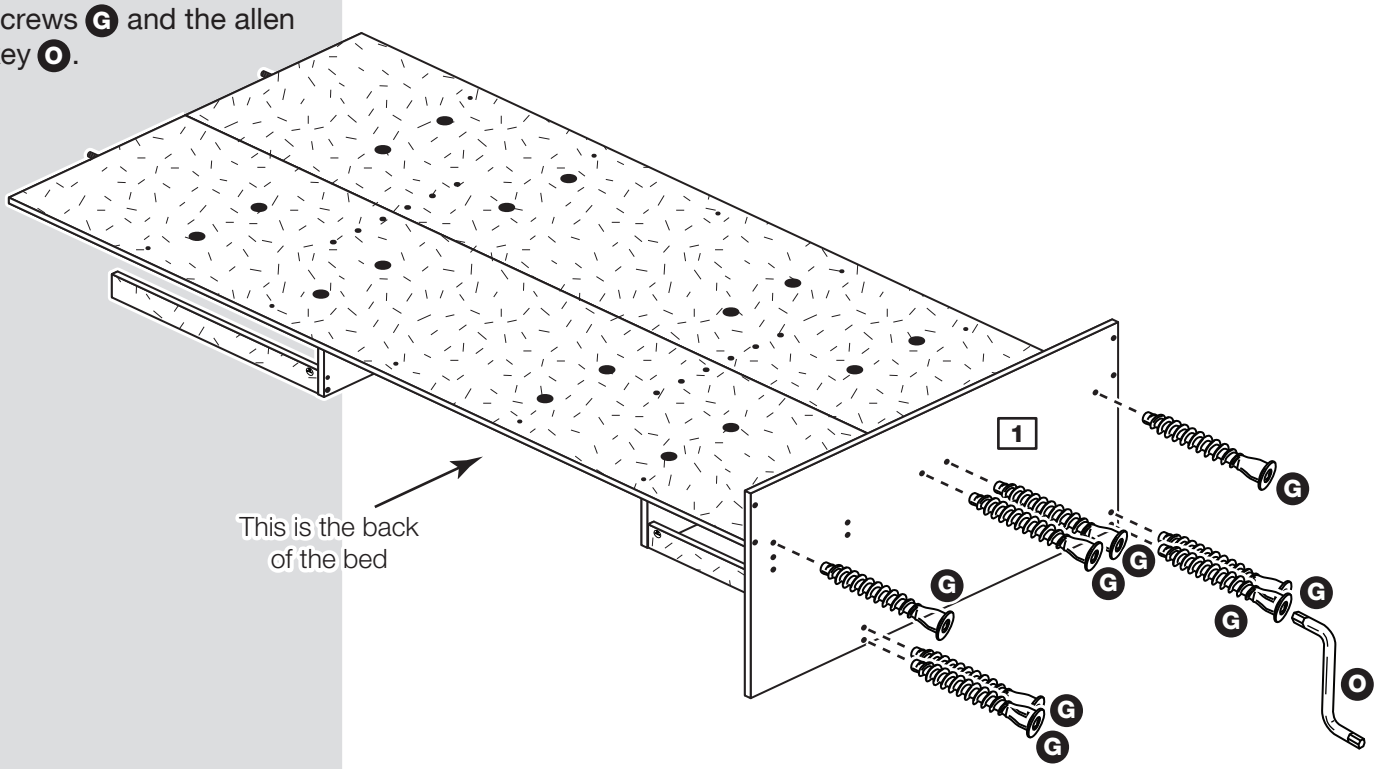

Step 28

Fit the 2 support rails

Fit the 2 support rails 12 to the left end 1 using 2 screws G for each rail and the allen key O.

Note: Use 2 people for this step and support the 2 support rails until the right end has been fitted.

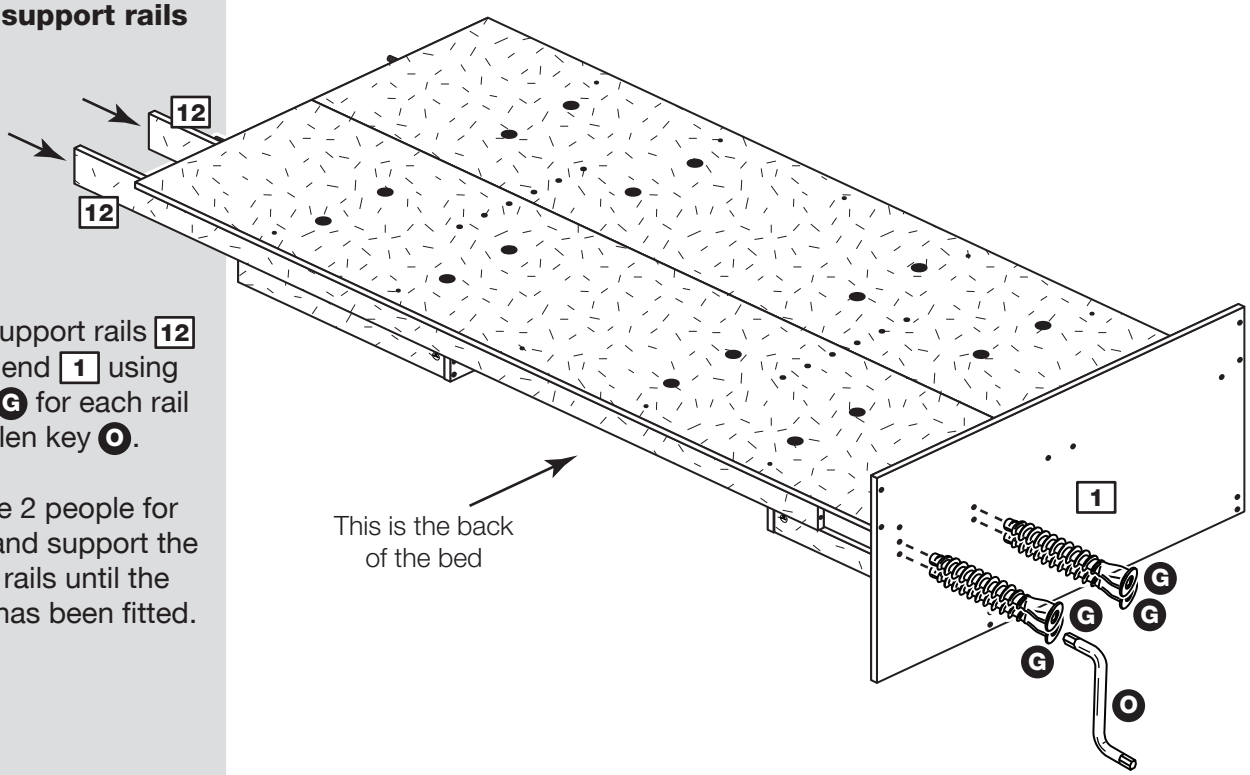

Step 29

Prepare the front rail and back rail

Tap 2 wooden dowels A into the front rail 11.

Tap 2 wooden dowels A into the back rail 13.

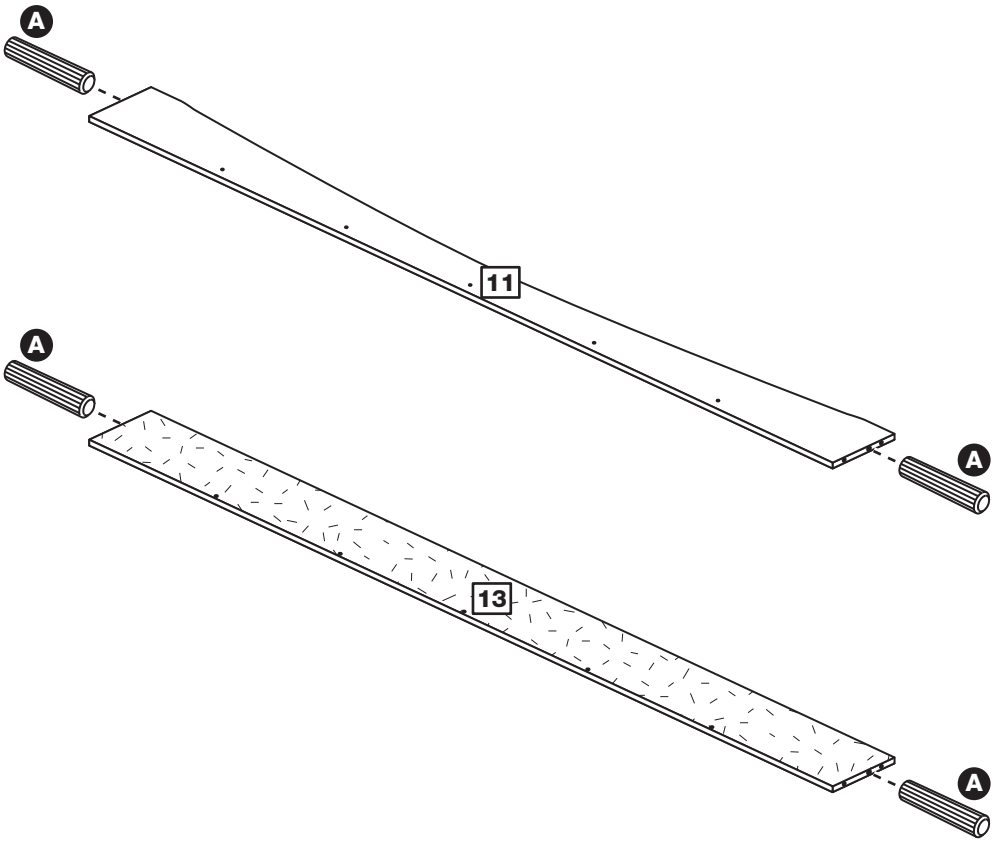

Step 30

Fit the front rail and back rail

Fit the front rail 11 to the left end 1 using 2 screws G and the allen key O.

Fit the back rail 13 to the left end 1 using 2 screws G and the allen key O.

Note: Support the front and back rail until the right end has been fitted.

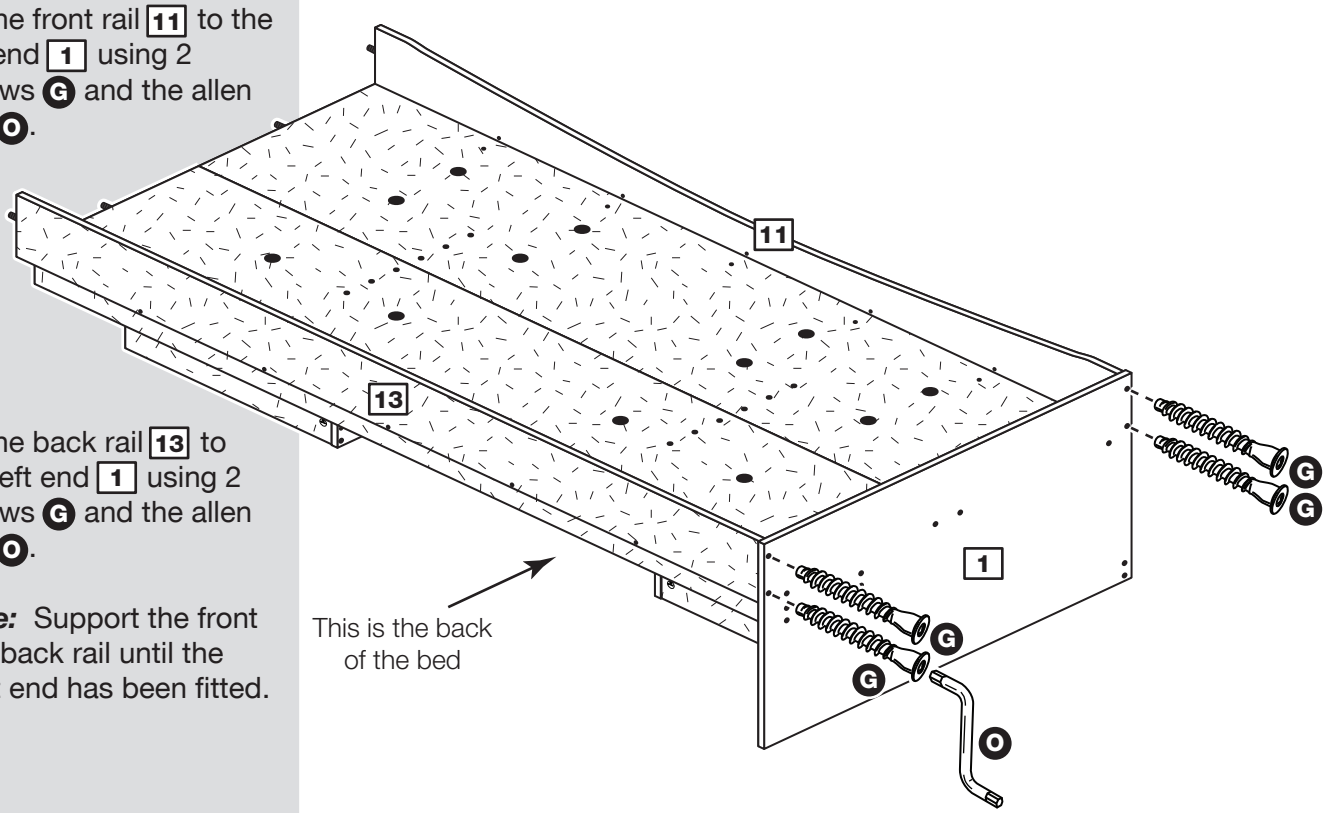

Step 31

Fit the right end

Fit the right end 2 onto the assembly using 16 screws G and the allen key O.

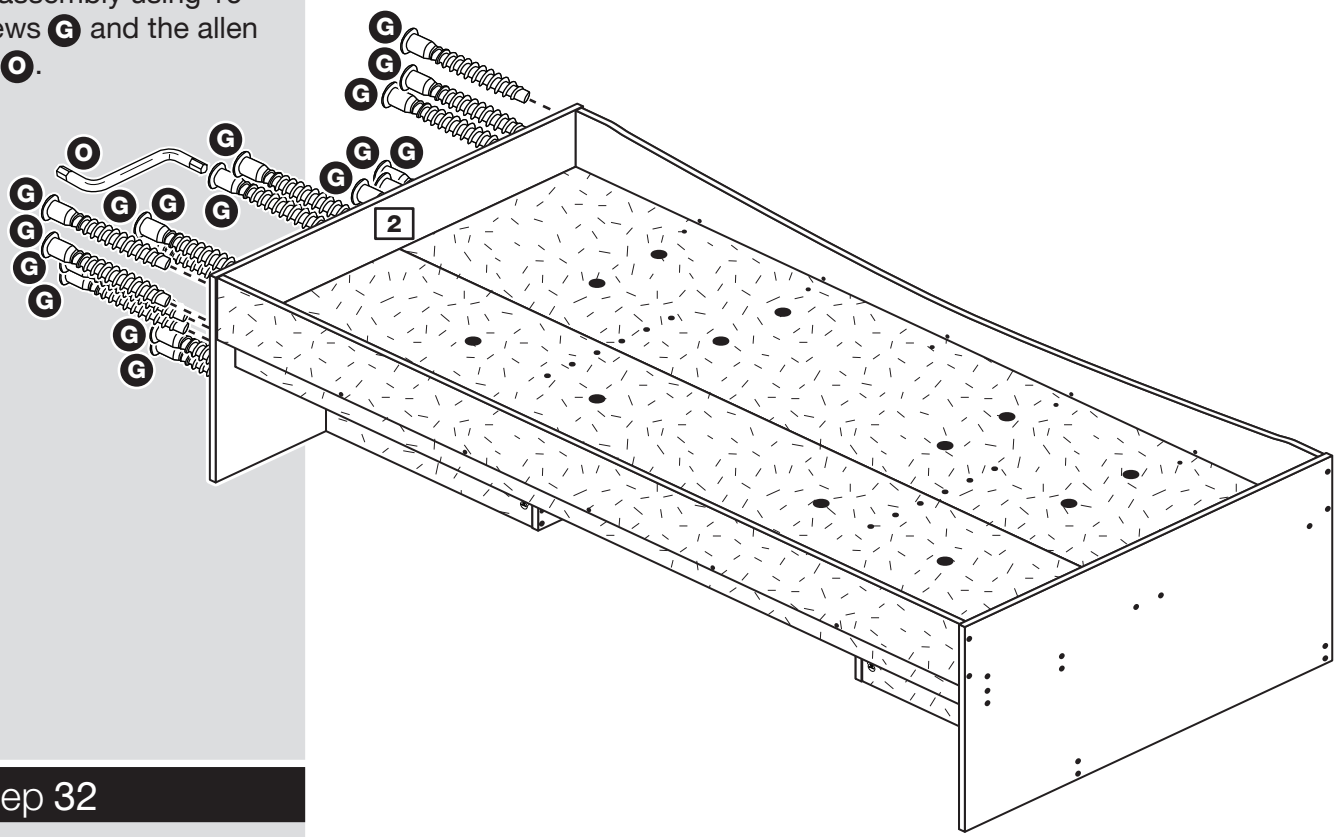

Step 32

Secure the rear support rail

Screw through the 5 holes in the base 7 and into the top edge of the support rail 12 using 5 screws H.

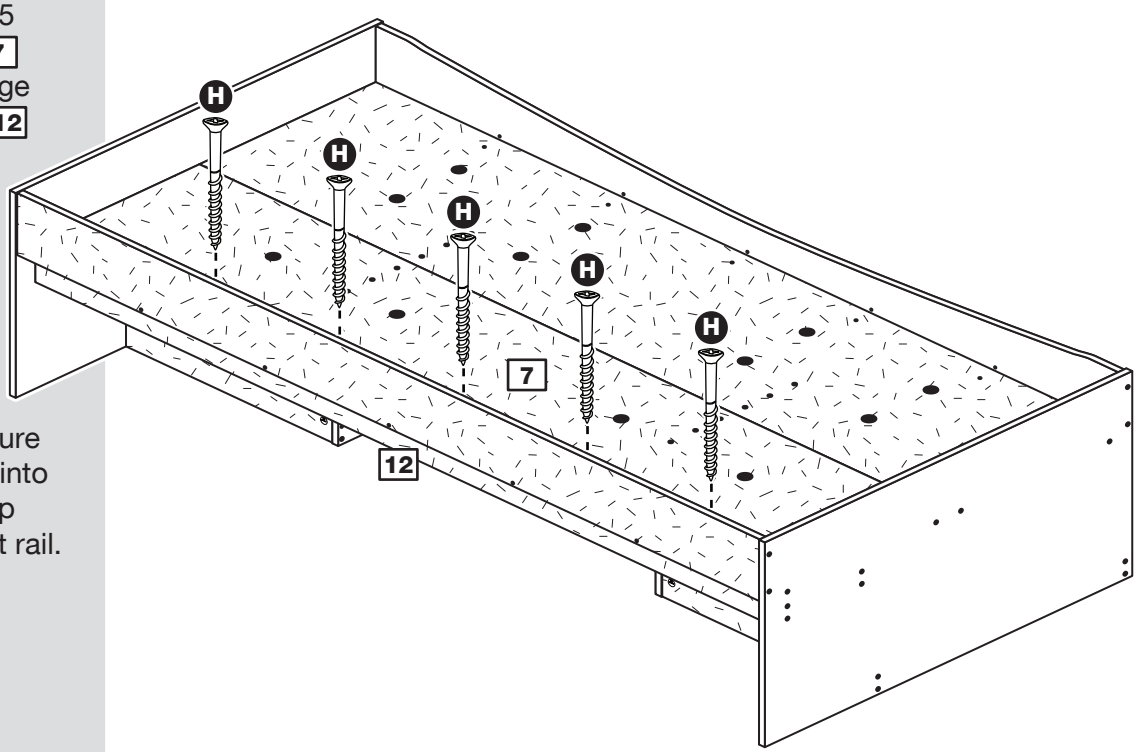

Important: Make sure that the screws go into the centre of the top edge of the support rail.

Step 33

Secure the back rail

Fix the back rail 13 to the back edge of the base 7 using 5 screws H.

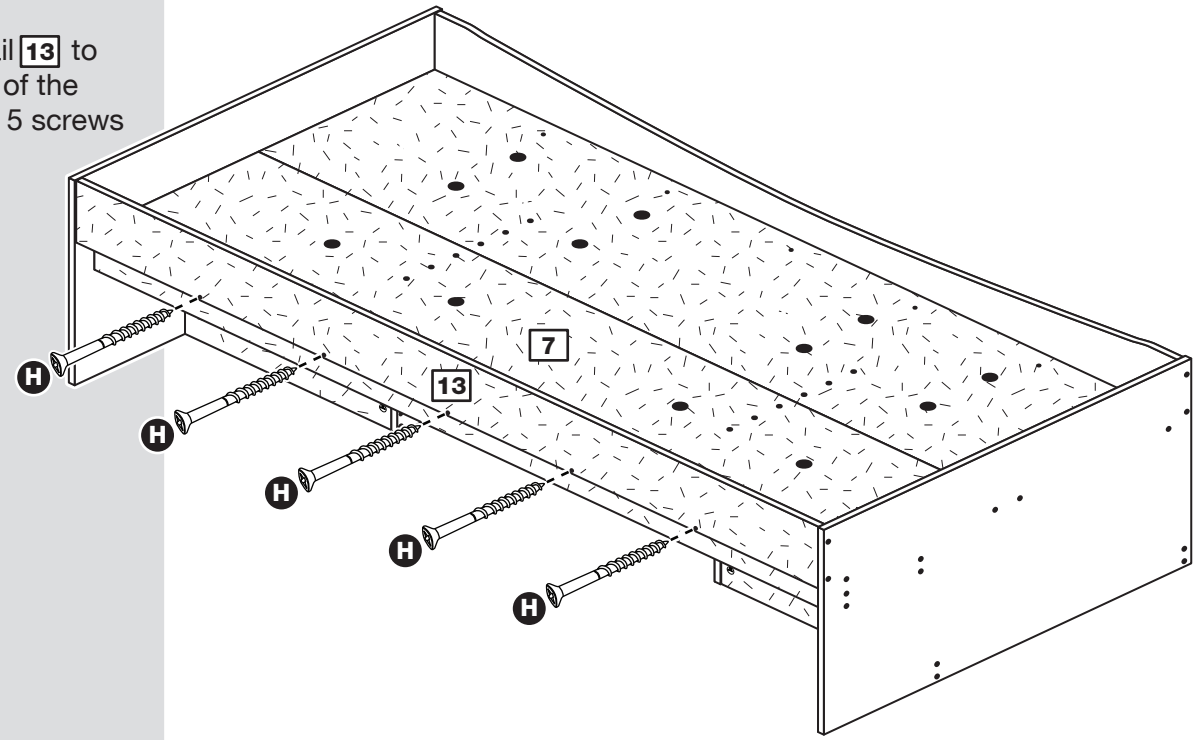

Step 34

Secure the front rail

Loosely fix the 5 brackets Q to the holes in the base 7 using screws K.

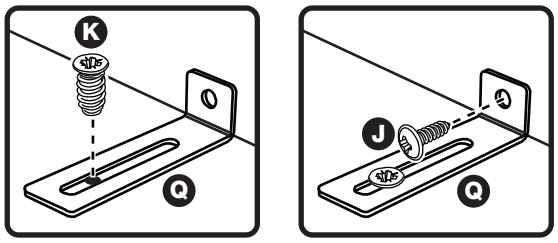

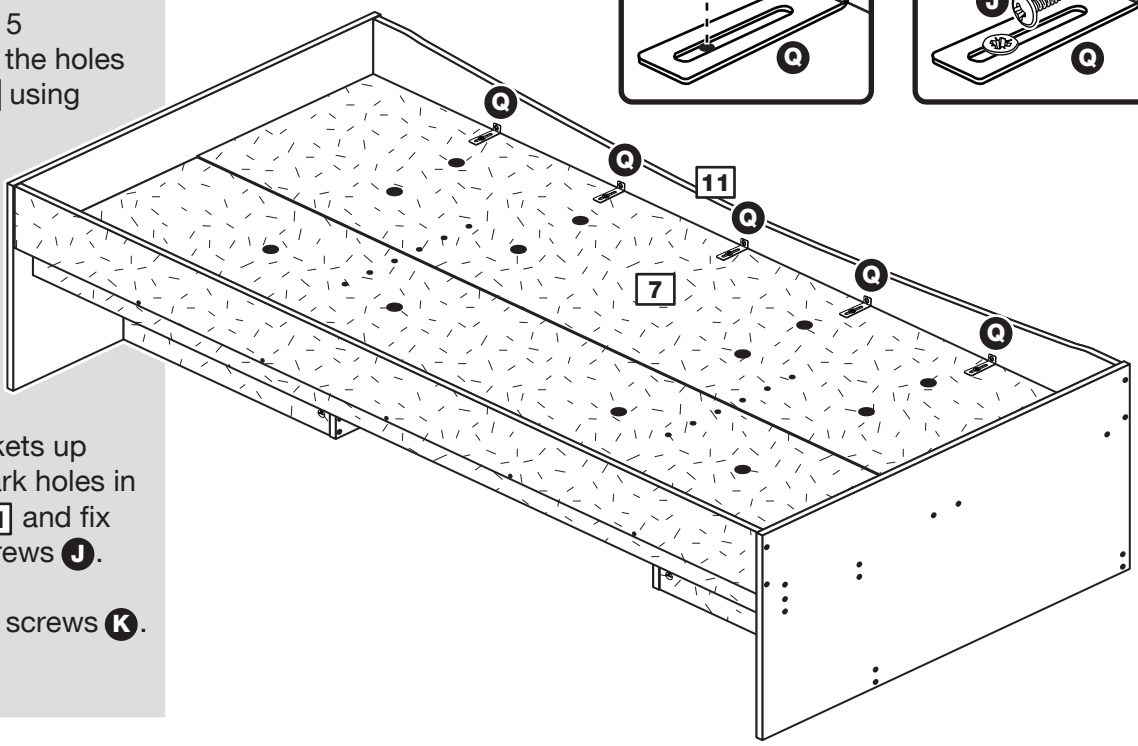

Slide the brackets up against the mark holes in the front rail 11 and fix them using screws J.

Tighten up the screws K.

Step 35

Fit the drawers

Starting with the bottom drawers, slide both the runners S forward and locate the drawer sides 15 and 16 between them, lining up the holes in the drawer wrap with the 2nd 'threaded' holes in the runners S.

Working from the inside of the drawer, insert 2 screws M through the drawer sides and out into the 2nd threaded hole in the runner.

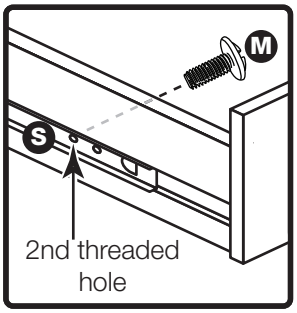

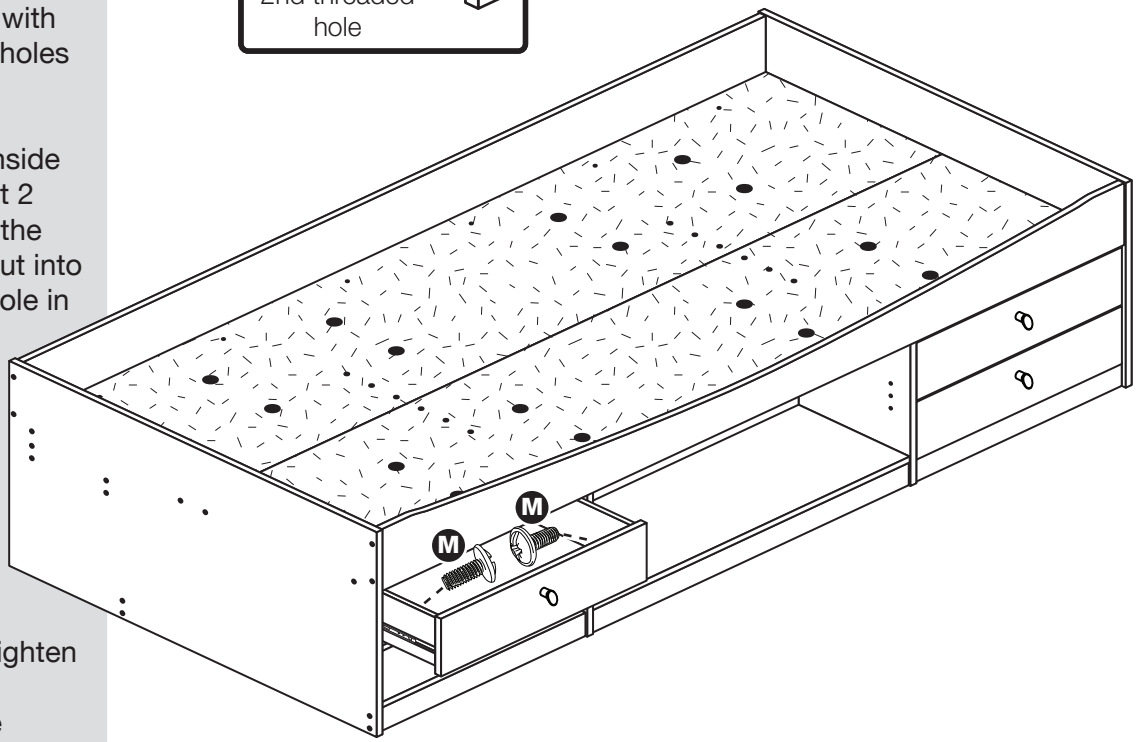

Note: Do not overtighten the screws.
If they catch on the runner you may need to loosen them slightly.

Step 36

Fit the shelf studds

Insert 4 shelf studs **U** at the required height into the uprights **4** and **5**.

Note: **The fitting of the shelf is optional so please ignore steps 36 and 37 if it is not required.**

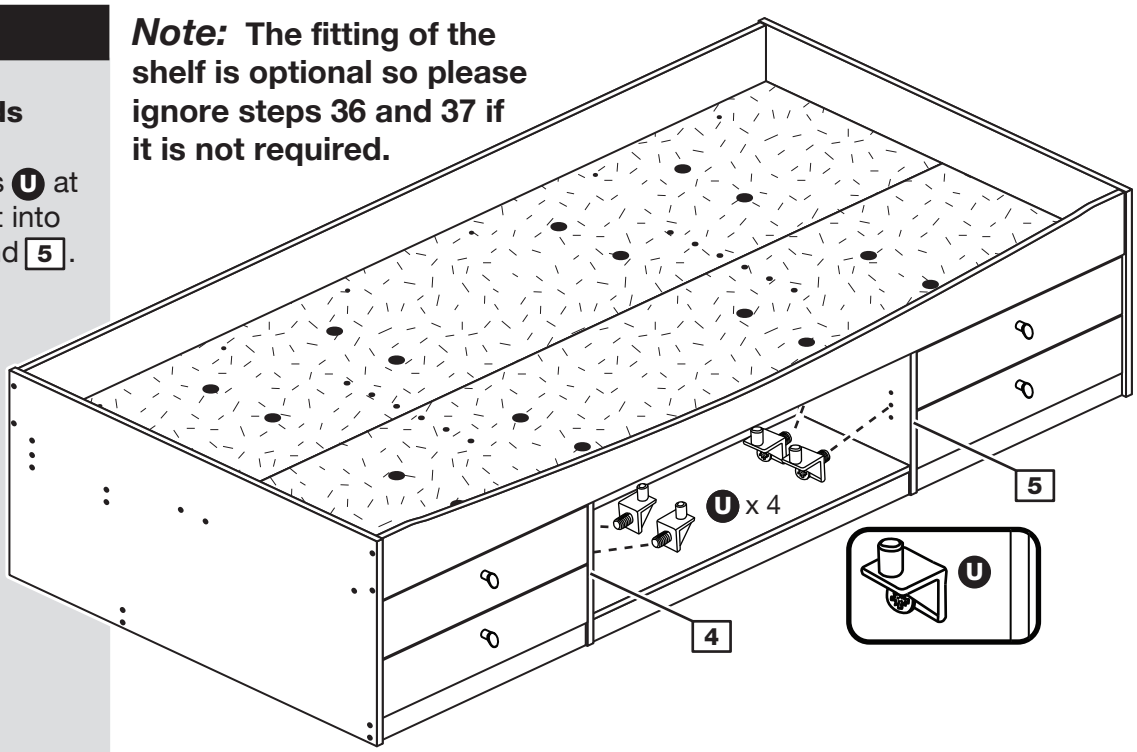

Step 37

Fit the shelf

Lower the shelf **19** down onto the shelf studs **U** and tighten their screws.

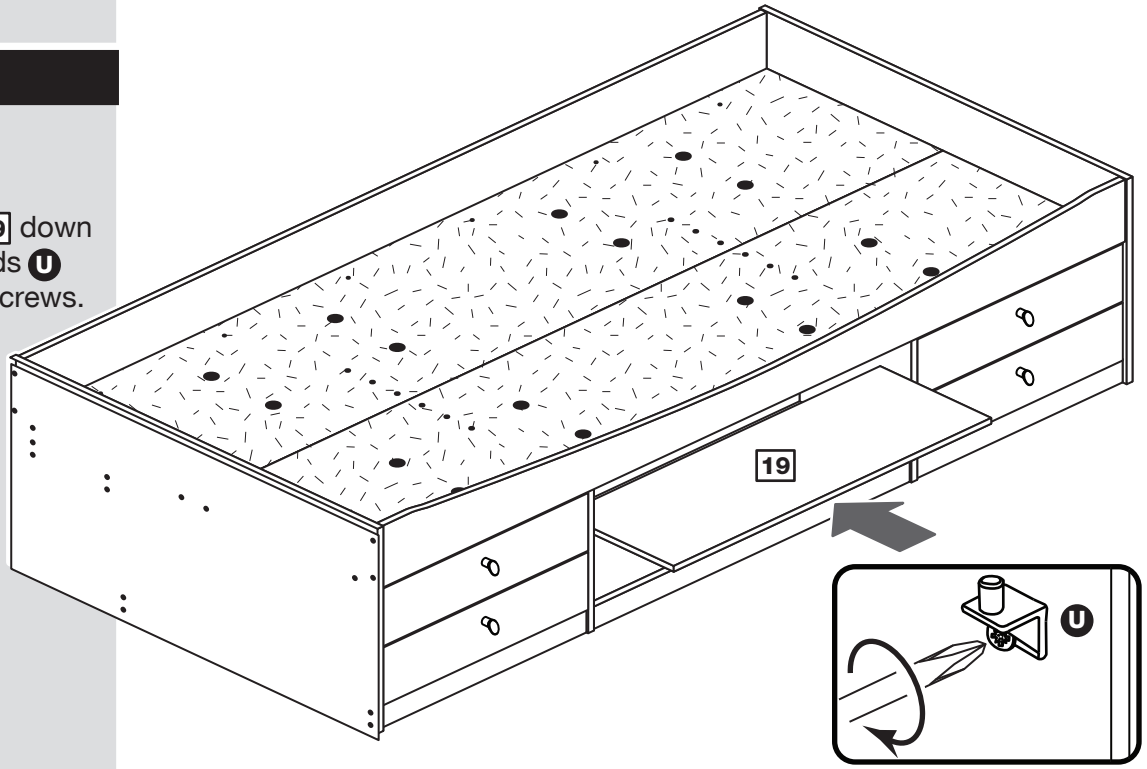

IMPORTANT

On a regular basis please check that the screws and fittings have not become loose as this could present a potential choke hazard.

If you need help or have damaged or missing parts, call the **Customer Helpline: 08456 400800**
and quote the reference numbers on the component pages.
Argos Ltd, 489-499 Avebury Boulevard, Central Milton Keynes, MK9 2NW

Malibu - Cabin Bed

Assembly Instructions - Please keep for future reference

268/5038
275/4433
278/5433
275/7557
249/2032
280/3315

WARNING
NOT SUITABLE FOR CHILREN UNDER 4 YEARS OF AGE .

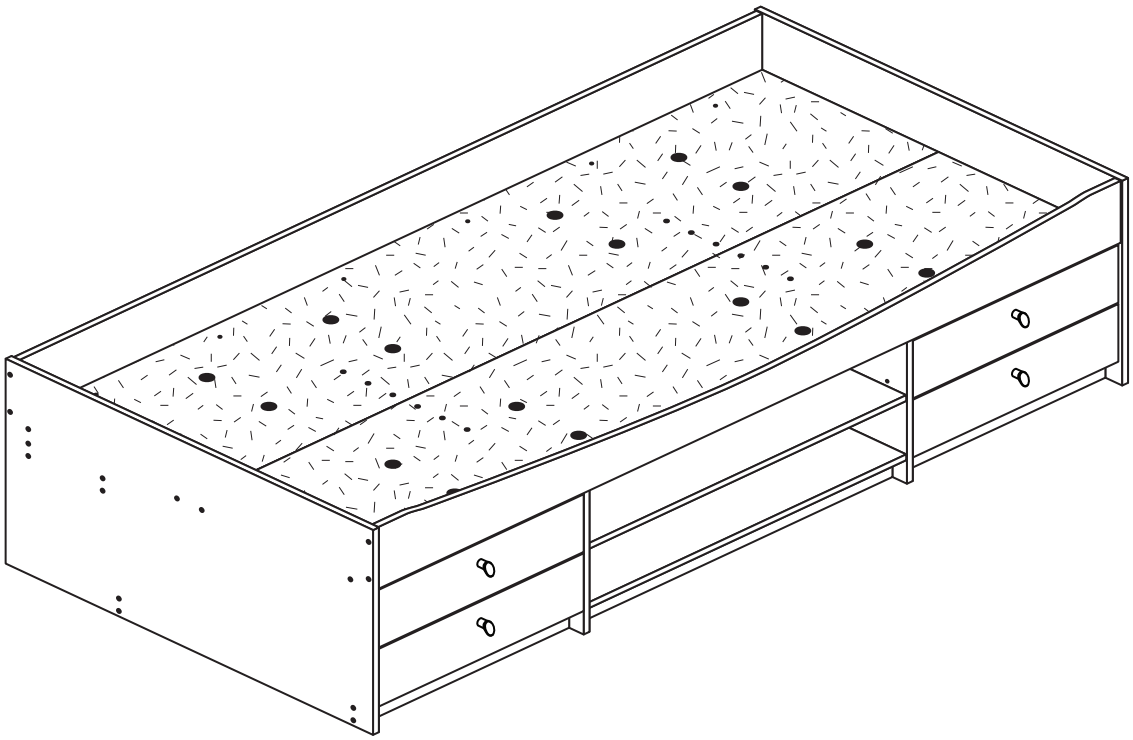

Dimensions
Width - 195cm
Depth - 95cm
Height - 53cm

MADE IN BRITAIN

Important - Please read these instructions fully before starting assembly

If you need help or have damaged or missing parts, call the **Customer Helpline: 08456 400800**

Issue 3 - 21/10/14

Safety and Care Advice

Important - Please read these instructions fully before starting assembly

• ***Warning:*** This unit weighs approximately 66kgs.
Please lift with care.

• Check you have all the components and tools listed on pages 2 and 3.

• Remove all fittings from the plastic bags and separate them into their groups.

• Keep children and animals away from the work area, small parts could choke if swallowed.

• Parts of the assembly will be easier with 2 people.

• Make sure you have enough space to layout the parts before starting.

• Do not stand or put weight on the product, this could cause damage.

• Assemble the item as close to its final position (in the same room) as possible.

• Assemble on a soft level surface to avoid damaging the unit or your floor (use opened out unit carton).

• We do not recommend the use of power drill/drivers ***for inserting screws***, as this could damage the unit. Only use hand screwdrivers.

• **Safety note:** If there is any chance of this unit being pulled over by children etc. it is recommended that the unit is secured to a wall using suitable fixings (not supplied).

• Dispose of all packaging carefully and responsibly.

Care and maintenance

• Only clean using a damp cloth and mild detergent, do no use bleach or abrasive cleaners.

• This product should not be discarded with household waste. Take to your local authority waste disposal centre.

Tools required

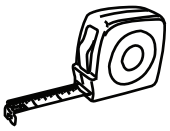

Rule

Cross-head screwdriver

Scissors

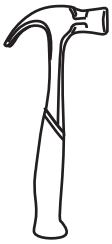

Hammer

Eye protection (when using a hammer or drill)

IMPORTANT
On a regular basis please check that the screws and fittings have not become loose as this could present a potential choke hazard.

Note: If required the next page can be cut out and used as reference throughout the assembly. Keep this page with these instructions for future reference.

Components - Panels

If you have damaged or missing components, call the **Customer Helpline: 08456 400800** *quoting the reference numbers below*

Please check you have all the panels listed below

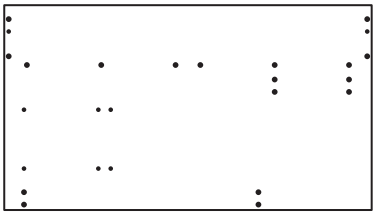

1 Left End *(D2931B)*
(949 x 529mm)

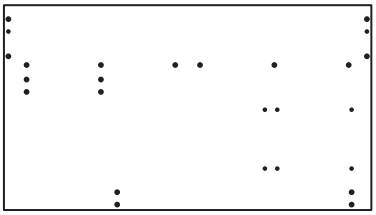

2 Right End *(D2936B)*
(949 x 529mm)

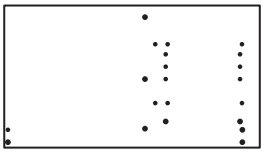

4 Left Upright *(D2937B)*
(367 x 660mm)

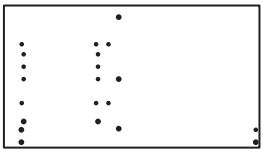

5 Right Upright *(D2929B)*
(367 x 660mm)

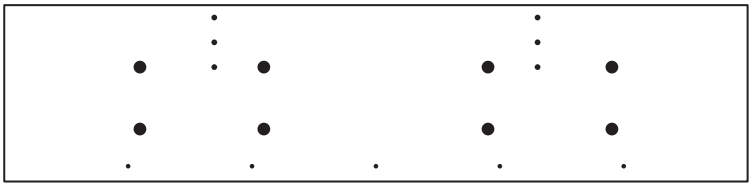

7 Base *(D2928A)*
(1920 x 455.5mm) x 2

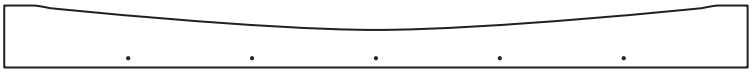

11 Front Rail *(D2938A)*
(1920 x 160mm)

12 Support Rail *(D2939A)*
(1920 x 92mm) x 2

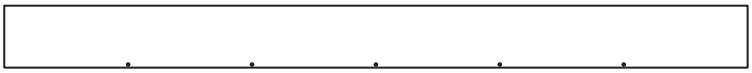

13 Back Rail *(D2926A)*
(1920 x 160mm)

17 Drawer Back *(W502-124)*
(502 x 124mm) x 4

18 Drawer Base *(T513-367)*
(513 x 367mm) x 4

3 Horizontal *(D2932A)*
(820 x 287mm)

6 Back *(D2927A)*
(820 x 367mm)

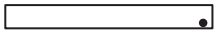

8 Left Plinth *(D2934A)*
(535 x 60mm) x 2

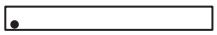

9 Right Plinth *(D2935A)*
(535 x 60mm) x 2

10 Middle Plinth *(D2933A)*
(820 x 60mm)

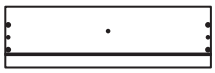

14 Drawer Front *(D2930B)*
(531 x 157mm) x 4

15 Left Drawer Side *(W370-124LH)*
(370 x 124mm) x 4

16 Right Drawer Side *(W370-124RH)*
(370 x 124mm) x 4

19 Shelf *(D3030A)*
(820 x 287mm)

Components - Fittings

If you have damaged or missing components, call the **Customer Helpline: 08456 400800** *quoting the reference numbers below*

Please check you have all the fittings listed below

Note: The quantities below are the correct amount to complete the assembly. In some cases more fittings may be supplied than are required.

A Wooden dowel *(F22)* x 16	**B** Metal dowel *(F901)* x 10	**C** Knock-in Peg *(F171GY)* x 16
D Large wooden dowel *(F40)* x 2	**E** Large locking nut *(F900)* x 6	**F** Small locking nut *(F3)* x 8
G 50mm Screw *(F49)* x 48	**H** 45mm Screw *(F65)* x 10	**I** 25mm Screw *(F50)* x 4
J 13mm Screw *(F79)* x 5	**K** 13mm Screw *(F52)* x 5	**L** 9mm Screw *(F73)* x 16
M 9mm Screw *(F74)* x 8	**N** Plastic Nail *(F91)* x 10	**O** Allen Key *(F36)* x 1
P Wedgefix *(F639)* x 8	**Q** Bracket *(F327)* x 5	**R** Handle *(F631)* x 4
S Drawer runner *(F1004)* x 8		**T** Double metal dowel *(F566)* x 2
U Shelf stud *(F372)* x 4		

Ruler - Use this ruler to help correctly identify the screws

mm 10 20 30 40 50 60 70 80 90 100 110 120 130 140 150 160 170

Assembly Instructions

If you have damaged or missing components, call the **Customer Helpline: 08456 400800** *quoting the reference numbers below*

Step 1

Prepare the 4 drawer fronts

Screw 2 metal dowels B into each of the 4 drawer fronts 14.

Note: Tighten the metal dowels up fully against the panels.

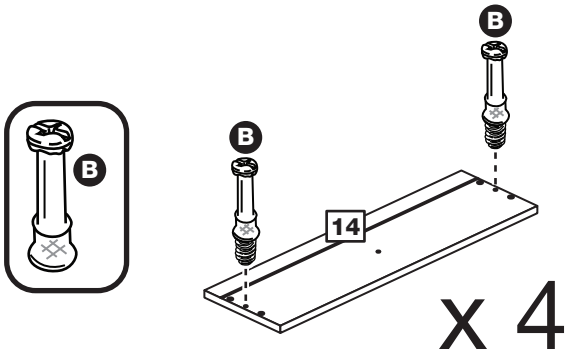

Step 2

Prepare 4 pairs of drawer sides

Insert a small locking nut F into the hole shown on the left drawer side 15 and the right drawer side 16.

Note: The arrow on the locking nut **must** point towards the hole in the edge of the panel.

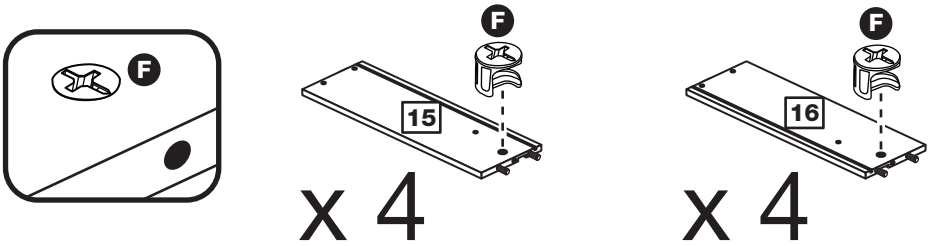

Step 3

Attach the drawer sides to the drawer fronts

Push the left drawer sides 15 and right drawer sides 16 onto the back of the 4 drawer fronts 14.

Turn the small locking nuts F on the left drawer side 15 and right drawer side 16.

Note: Turn the locking nuts F clockwise to secure panels - more than 1/2 a turn.

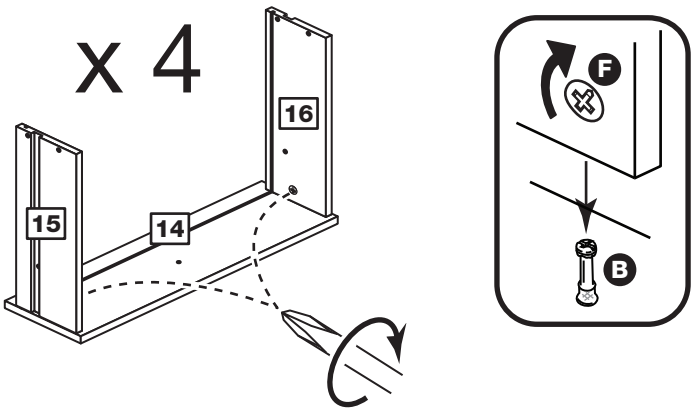

Assembly Instructions

Step 4

Fit the drawer base

Slide the drawer base 18 down the grooves in the drawer sides 15 and 16 and down into the groove in the drawer front 14.

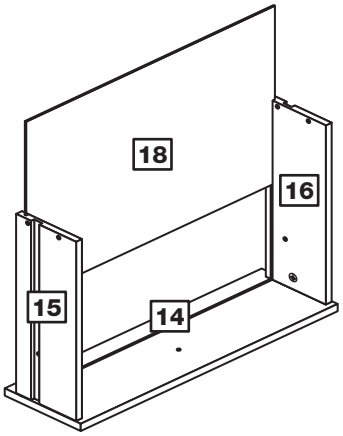

x 4

Step 5

Fit the drawer back

Fit the drawer back 17 between the drawer sides 15 and 16. Make sure that the drawer base 18 fits into the groove in the drawer back 17.

Hold the drawer back 17 in position and tap the knock-in pegs C through the holes in the drawer sides 15 and 16.

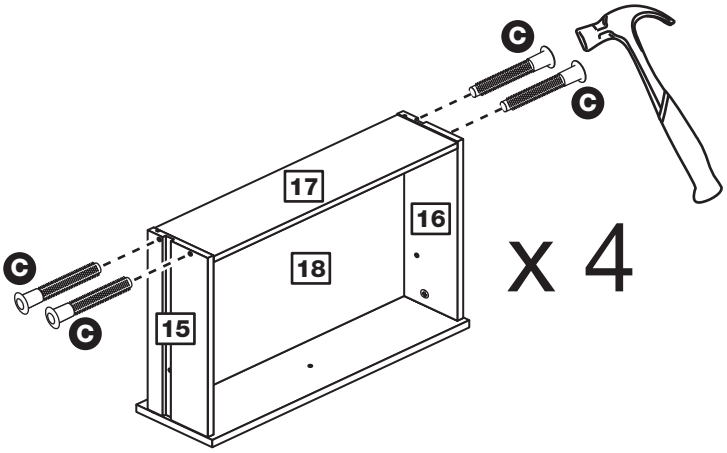

x 4

Step 6

Attach the handles

Attach a handle R to each of the drawer fronts 14 using screw I.

Note: Do not overtighten the screw.

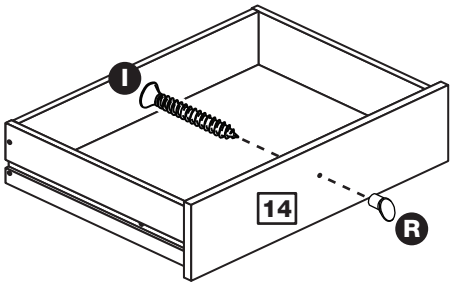

x 4

Step 7

Fit the wedgefixes

Turn the drawer assemblies over and slide 2 wedgefixes P into the front and back grooves, as shown, and tighten up the screws.

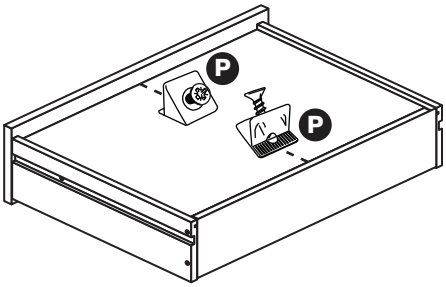

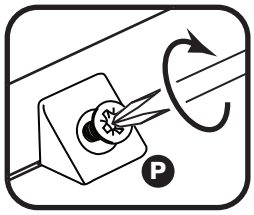

x 4

Step 8

Prepare the left upright

a: Tap 2 wooden dowels (A) into the left upright [4].

Screw a metal dowel (B) into the left upright [4].

Place 2 runners (S) on the left upright [4] as shown. Slide back the top of runner and use the 2nd hole from the front to fit the 1st screw (L).

b: Slide the runner (S) back the other way and fit the 2nd screw (L) into the corresponding hole in the left upright [4].

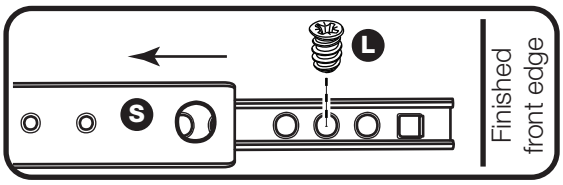

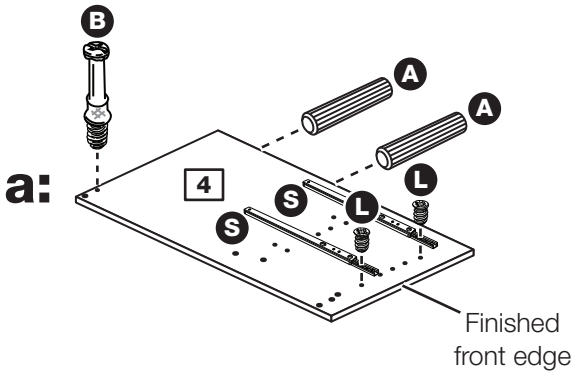

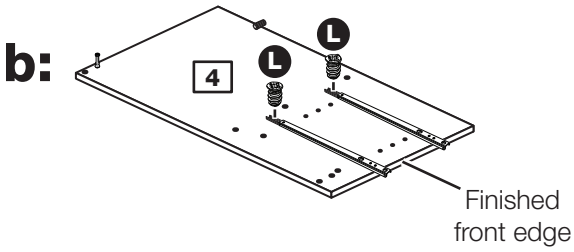

Step 9

Prepare the right upright

a: Tap 2 wooden dowels (A) into the right upright [5].

Screw a metal dowel (B) into the right upright [5].

Place 2 runners (S) on the right upright [5] as shown. Slide back the top of runner and use the 2nd hole from the front to fit the 1st screw (L).

b: Slide the runner (S) back the other way and fit the 2nd screw (L) into the corresponding hole in the right upright [5].

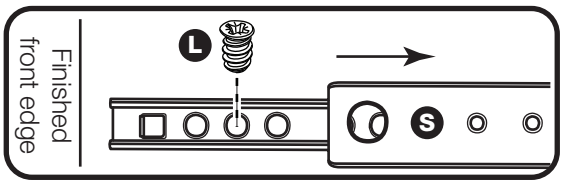

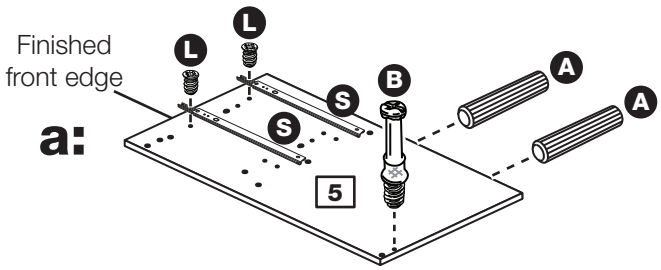

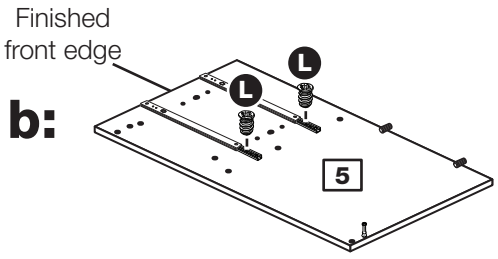

Step 10

Fit the horizontal to the right upright

Fit the horizontal 3 onto the right upright 5 using 2 screws G and the allen key O.

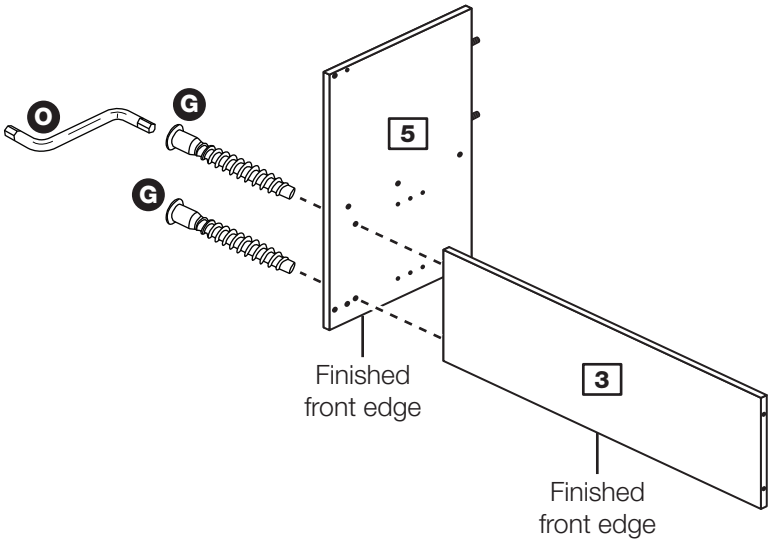

Step 11

Prepare the middle plinth

Insert 2 large locking nuts E into the middle plinth 10.

Note: The arrow on the locking nut **must** point towards the hole in the edge of the panel.

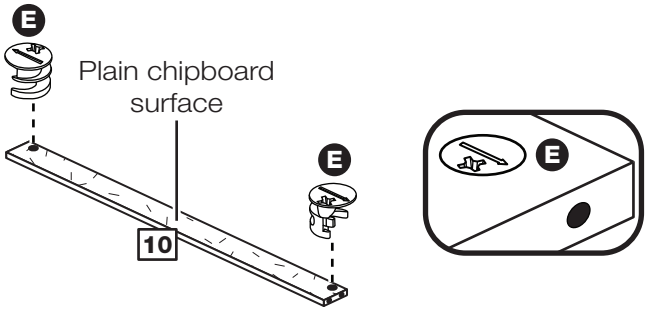

Step 12

Fit the middle plinth

a: Tap a double metal dowel T and a large wooden dowel D through the right upright 5 and into the middle plinth 10 until they ''bottom out".

b: Use a screwdriver to tighten the large locking nut E fitted to the middle plinth 10.

Note: Turn the large locking nuts E as far as they will go - more than 1/2 a turn.

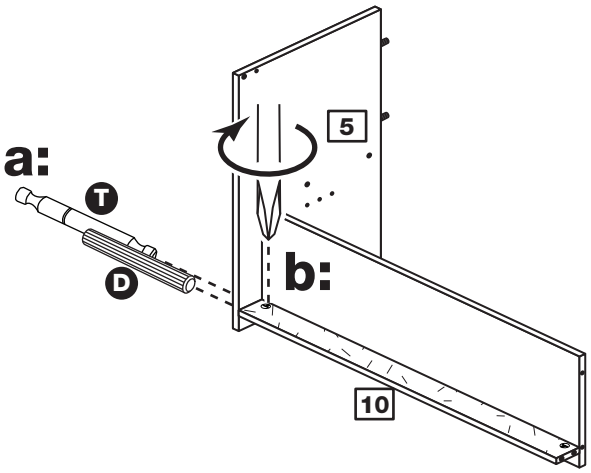

Important: It is critical that the middle plinth is asssembled with the large locking nuts at the top.

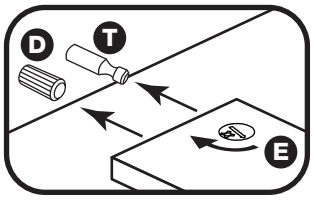

Step 13

Prepare the back

Tap 2 wooden dowels A into the back 6.

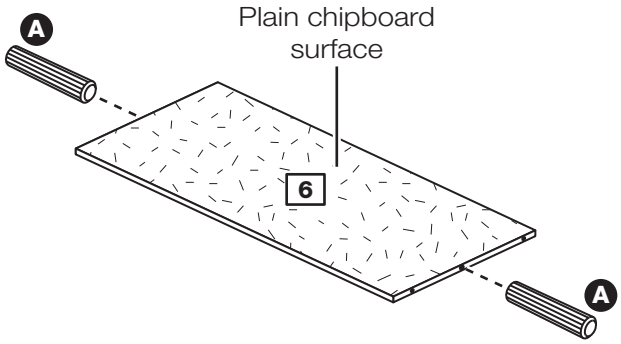

Step 14

Fit the back

Push the back 6 onto the right upright 5 and fix it using 2 screws G and the allen key O.

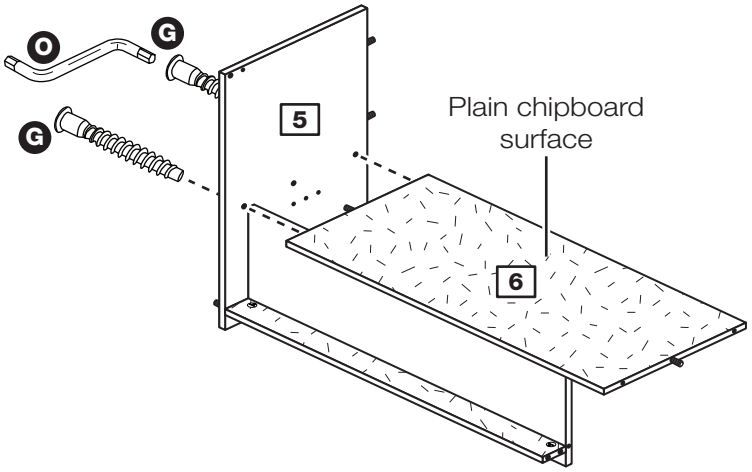

Step 15

Fit the left upright

Push the left upright 4 onto the assembly and fix it using 4 screws G and the allen key O.

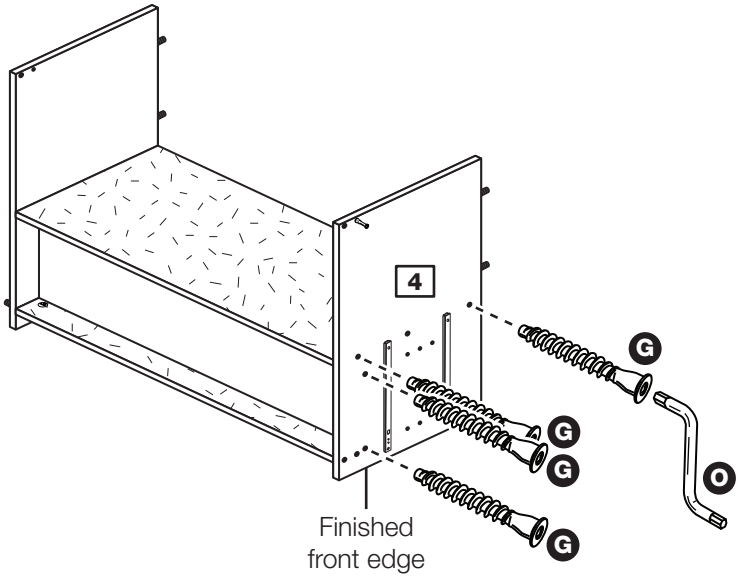

Step 16

Secure the middle plinth to the left upright

a: Tap a double metal dowel T and a large wooden dowel D through the left upright 4 and into the middle plinth 10 until they ''bottom out".

b: Use a screwdriver to tighten the large locking nut E fitted to the middle plinth 10.

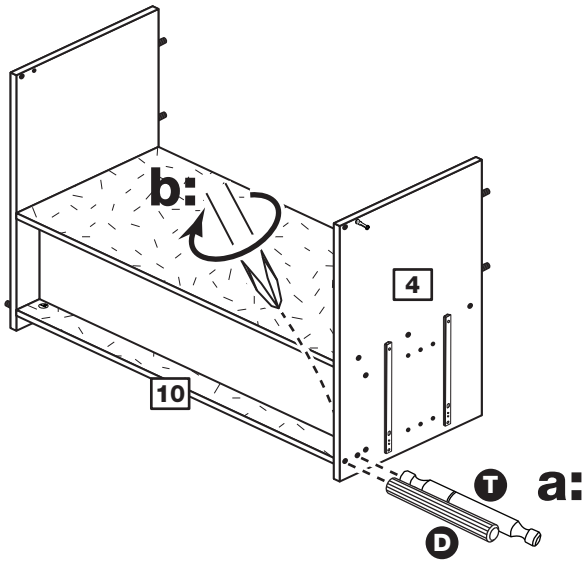

Step 17

Fit the 4 plastic nails

Tap 2 plastic nails N into the bottom edge of each of the uprights 4 and 5.

Carefully stand the assembly up.

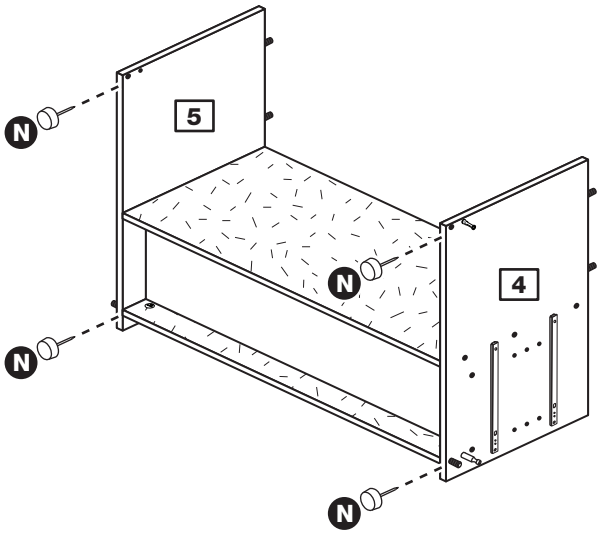

Step 18

Prepare the 2 left plinths

Tap a wooden dowel A into just 1 of the 2 left plinths 8.

Insert a large locking nut E into each of the 2 left plinths 8.

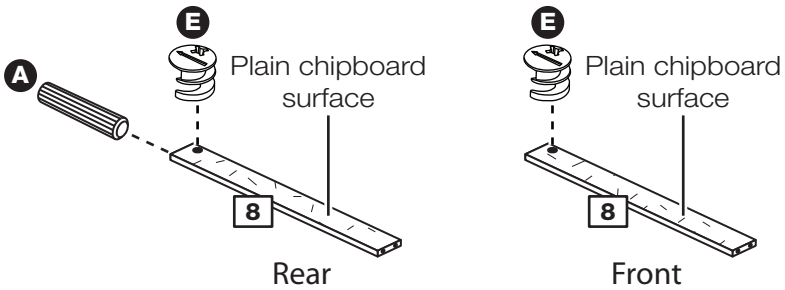

Step 19

Fit the left plinths to the left upright

Push the left plinths 8 onto the left upright 4.

Use a screwdriver to tighten the large locking nuts E fitted to the left plinths 8.

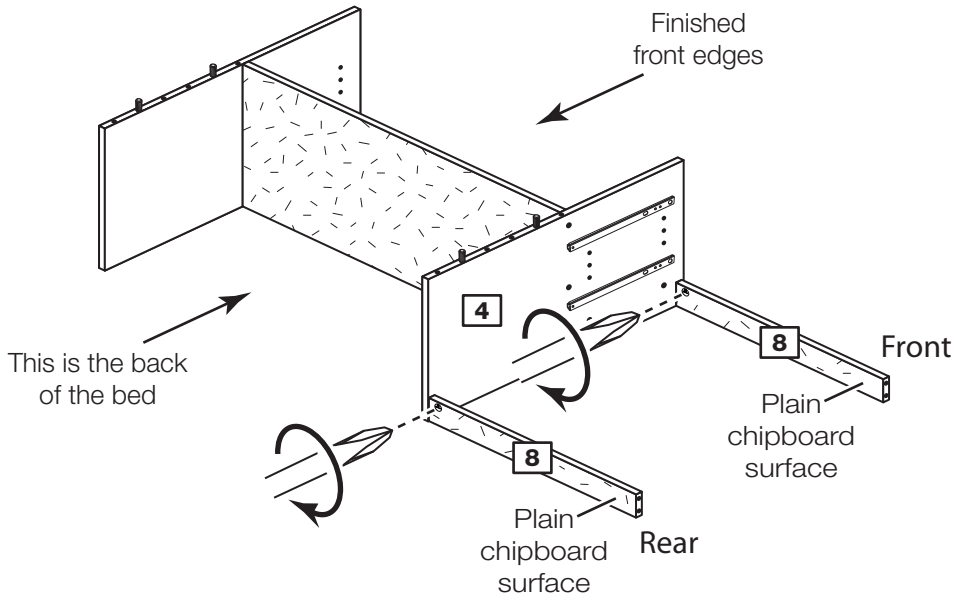

Step 20

Prepare the 2 right plinths

Tap a wooden dowel A into just 1 of the 2 right plinths 9.

Insert a large locking nut E into each of the 2 right plinths 9.

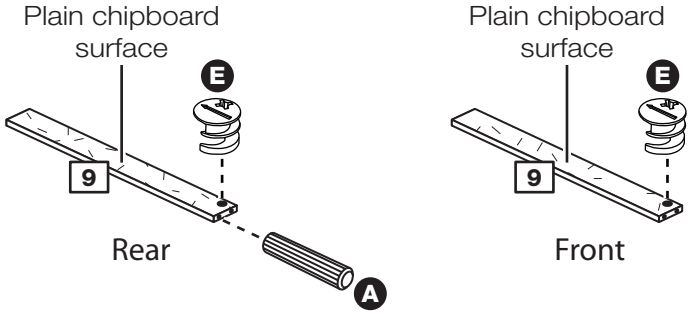

Step 21

Fit the right plinths to the right upright

Push the right plinths 9 onto the right upright 5.

Use a screwdriver to tighten the large locking nuts E fitted to the right plinths 9.

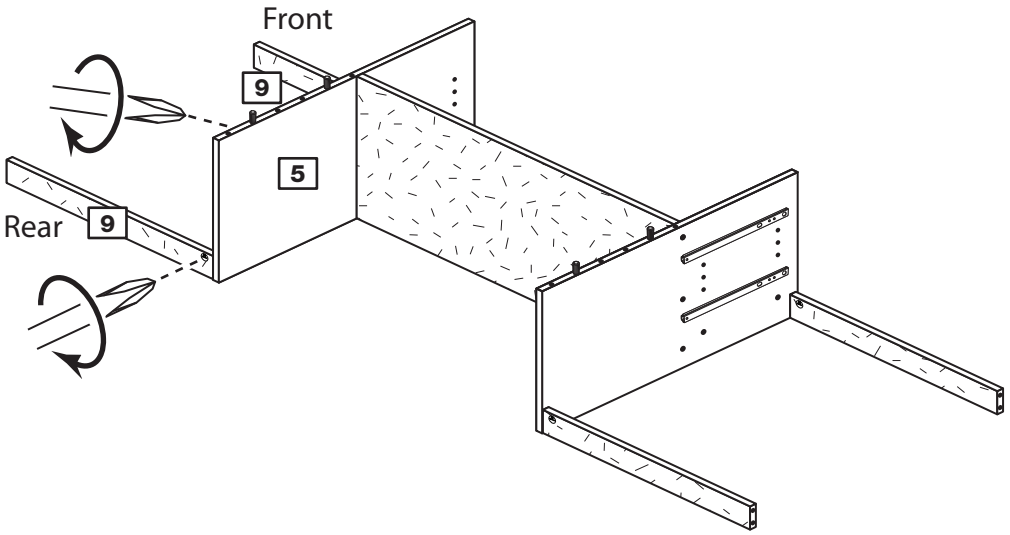

Step 22

Prepare the 2 bases

Tap 2 wooden dowels A into each of the 2 bases 7.

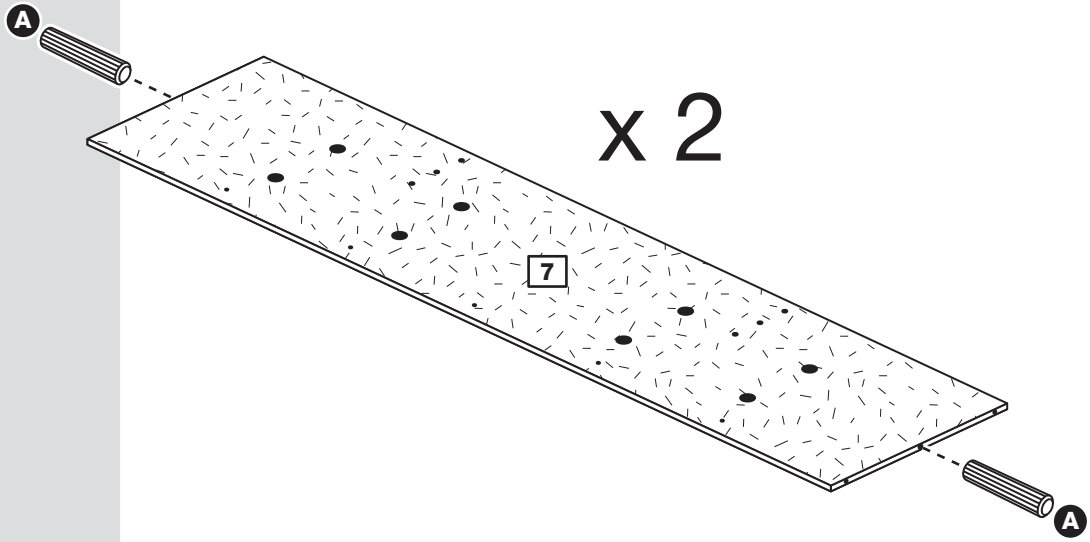

Step 23

Fit a base

Fit a base 7 down onto the 2 uprights 4 and 5 using 4 screws G and the allen key O.

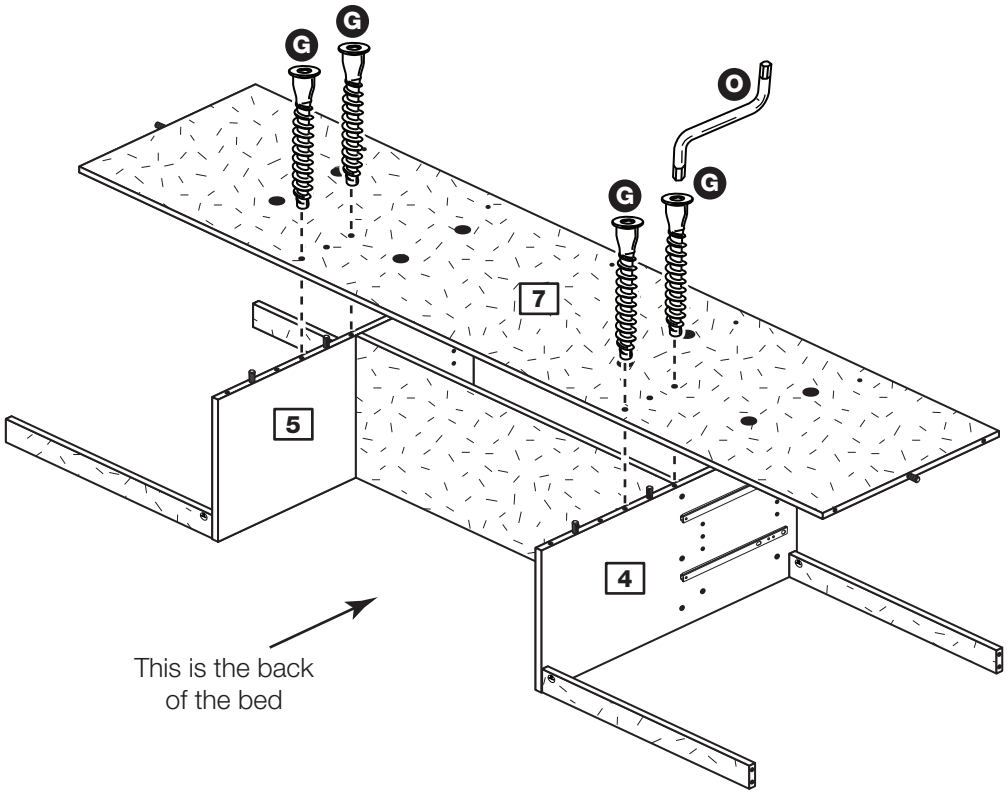

Step 24

Fit the other base

2 people are needed to asssemble this part

Fit the other base 7 down onto the 2 uprights 4 and 5 using 4 screws G and the allen key O.

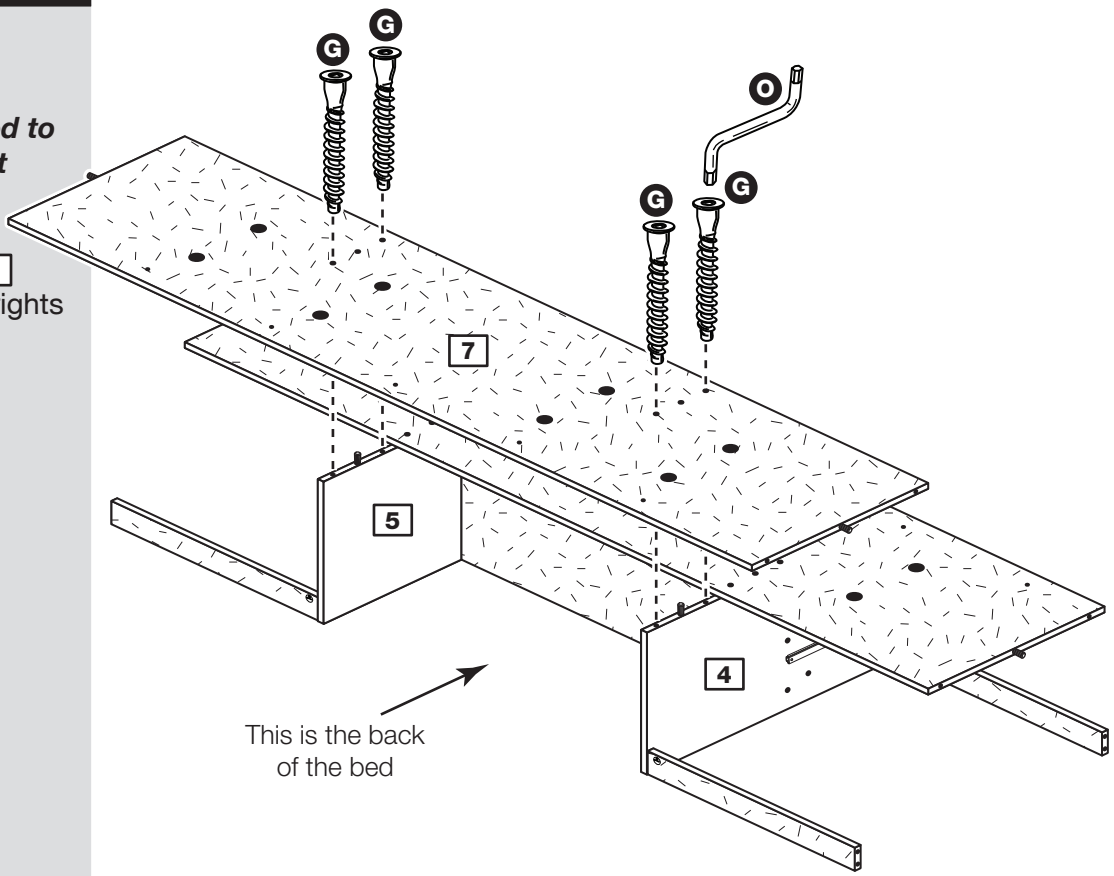

Step 25

Prepare the right end

a: Place 2 runners S on the right end 2 as shown. Slide back the top of runner and use the 2nd hole from the front to fit the 1st screw L.

b: Slide the runner S back the other way and fit the 2nd screw L into the corresponding hole in the right end 2.

Tap 3 plastic nails N into the bottom edge of each of the right end 2.

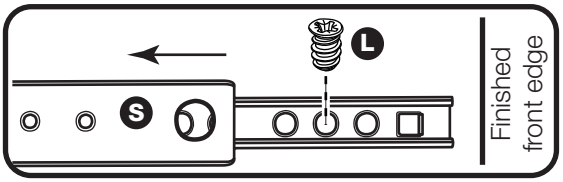

a:

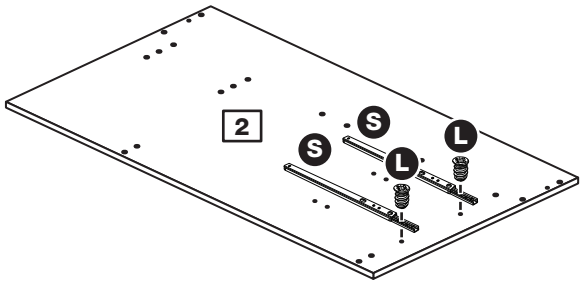

b:

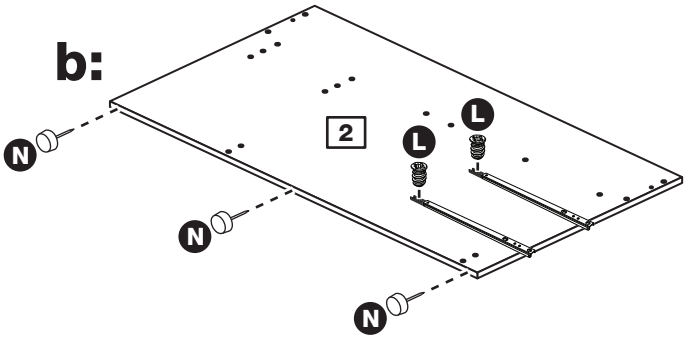

Step 26

Prepare the left end

a: Place 2 runners S on the left end 1 as shown. Slide back the top of runner and use the 2nd hole from the front to fit the 1st screw L.

b: Slide the runner S back the other way and fit the 2nd screw L into the corresponding hole in the left end 1.

Tap 3 plastic nails N into the bottom edge of each of the left end 1.

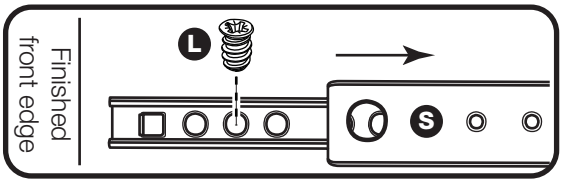

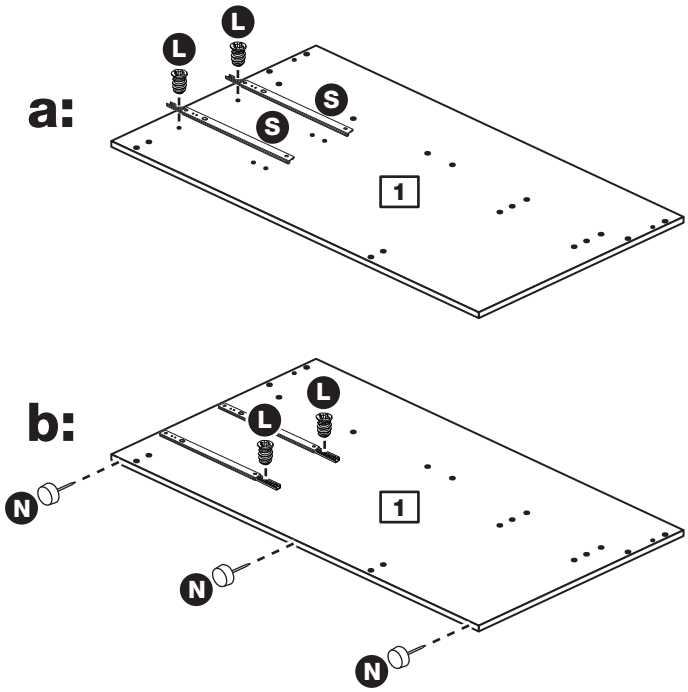

Step 27

Fit the left end

Fit the left end 1 onto the assembly using 8 screws G and the allen key O.

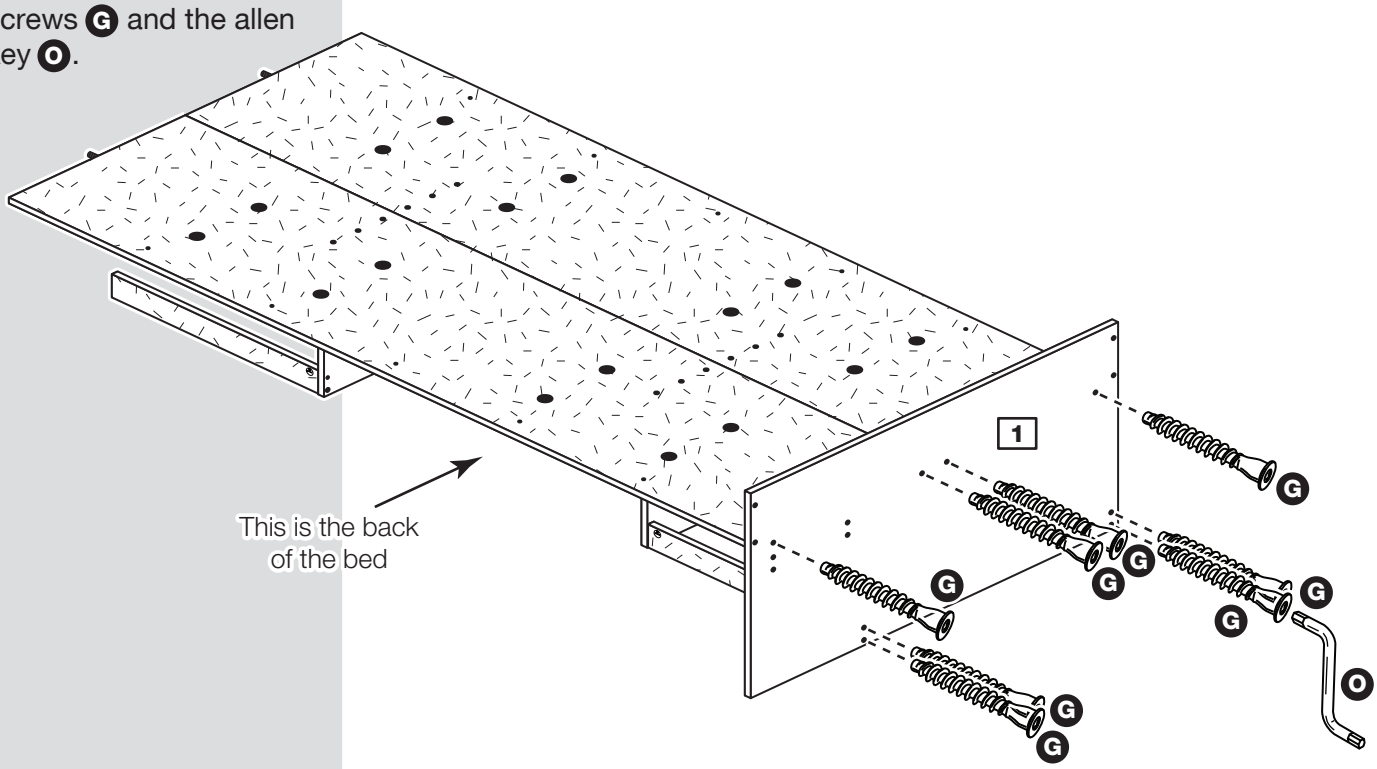

Step 28

Fit the 2 support rails

Fit the 2 support rails 12 to the left end 1 using 2 screws G for each rail and the allen key O.

Note: Use 2 people for this step and support the 2 support rails until the right end has been fitted.

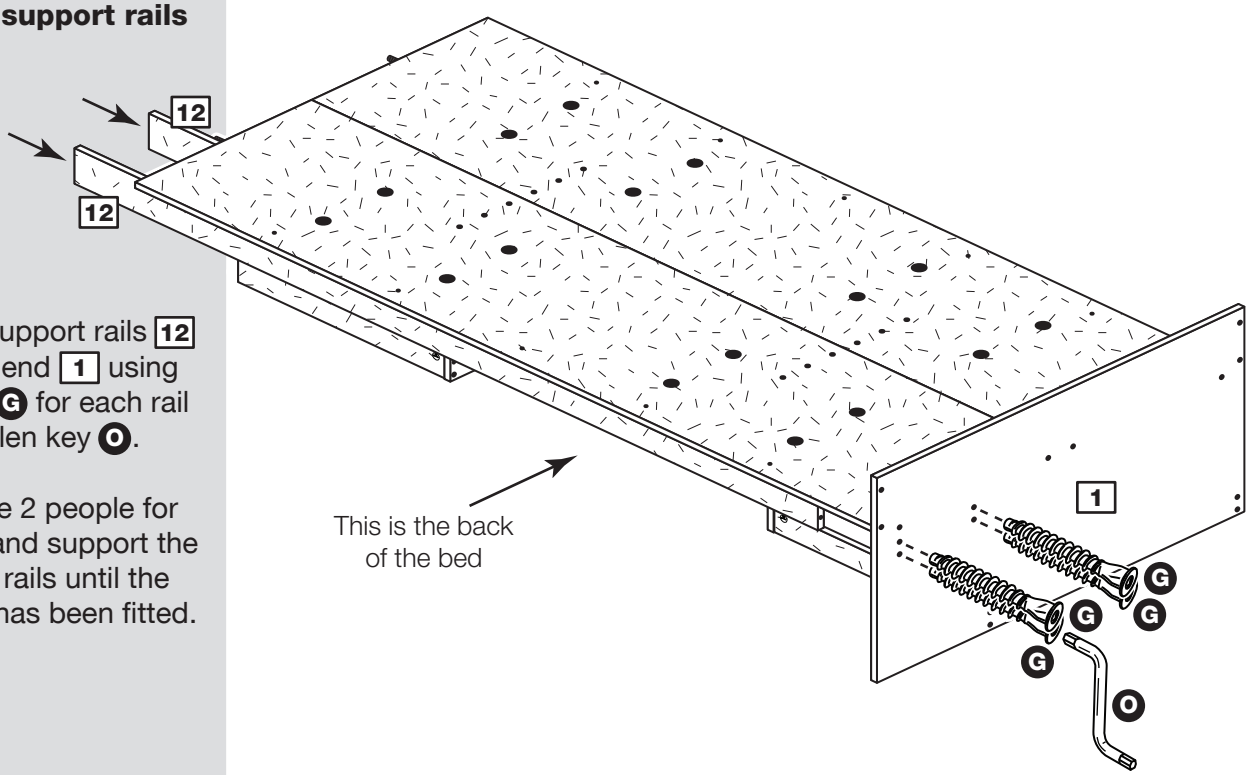

Step 29

Prepare the front rail and back rail

Tap 2 wooden dowels A into the front rail 11.

Tap 2 wooden dowels A into the back rail 13.

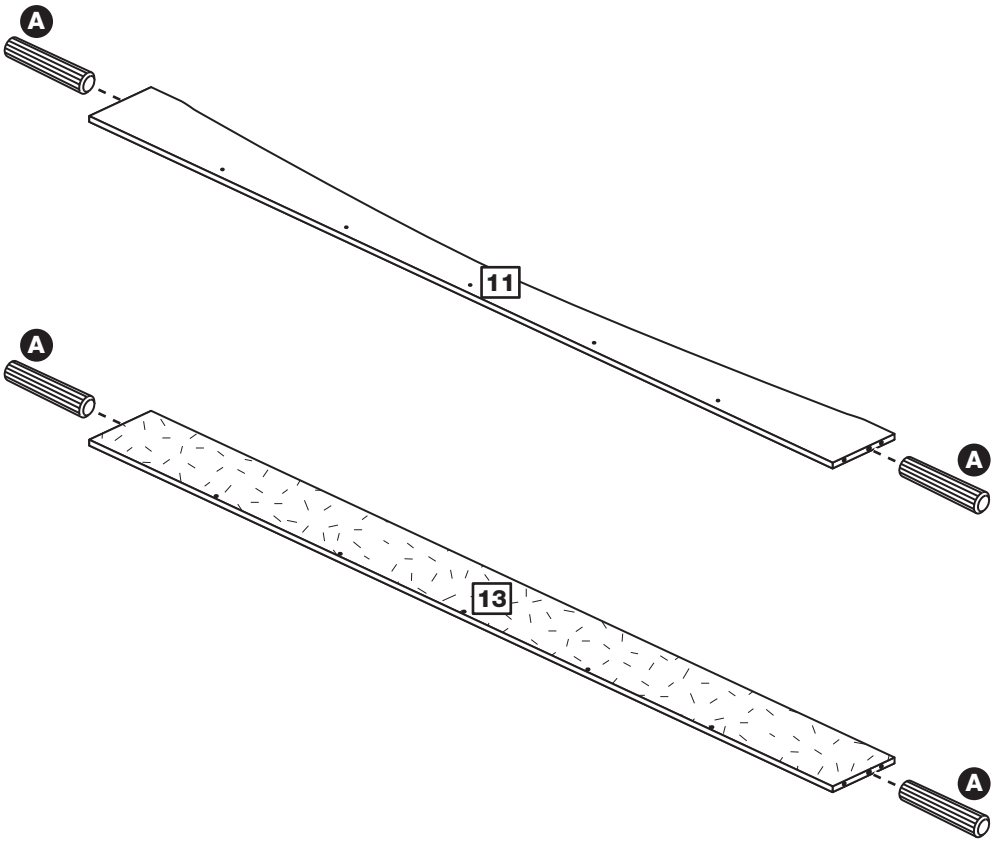

Step 30

Fit the front rail and back rail

Fit the front rail 11 to the left end 1 using 2 screws G and the allen key O.

Fit the back rail 13 to the left end 1 using 2 screws G and the allen key O.

Note: Support the front and back rail until the right end has been fitted.

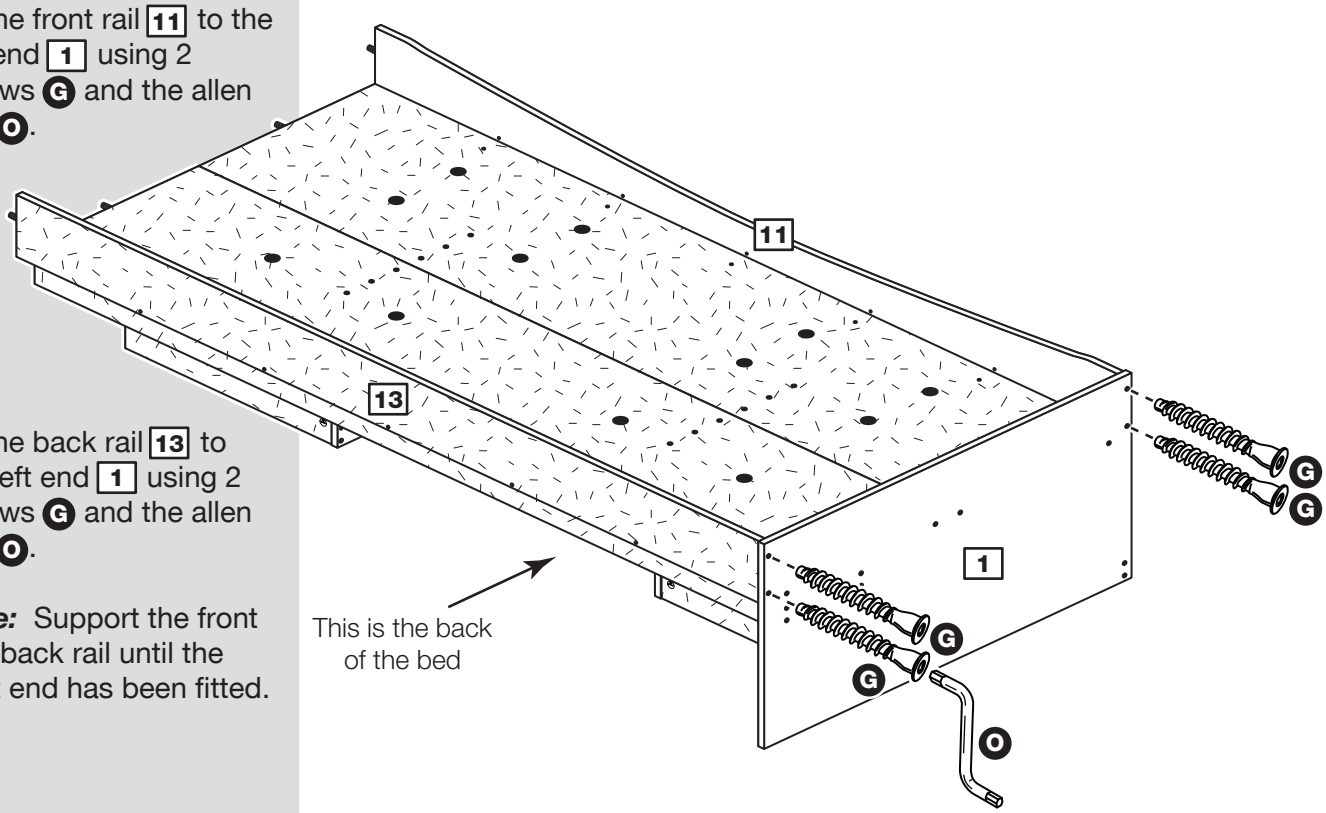

Step 31

Fit the right end

Fit the right end 2 onto the assembly using 16 screws G and the allen key O.

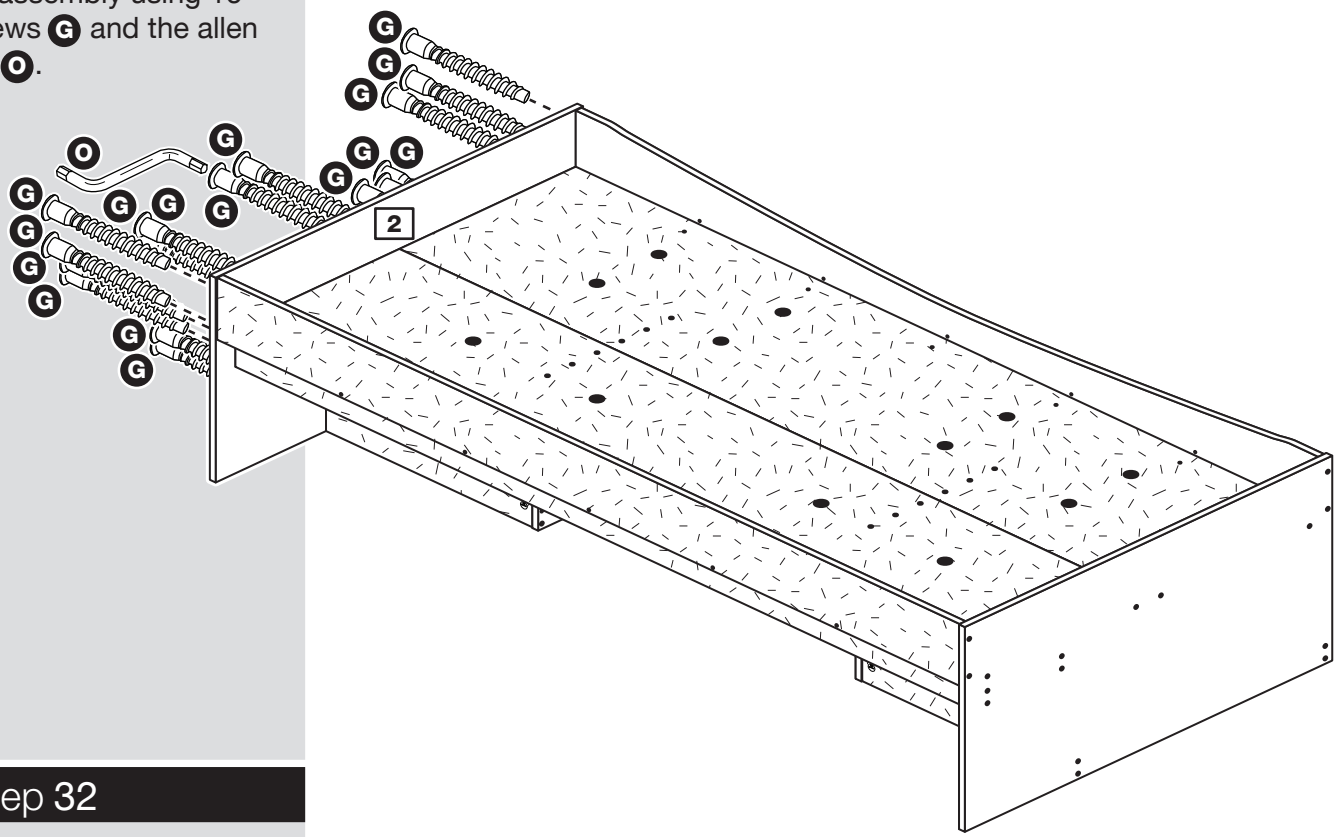

Step 32

Secure the rear support rail

Screw through the 5 holes in the base 7 and into the top edge of the support rail 12 using 5 screws H.

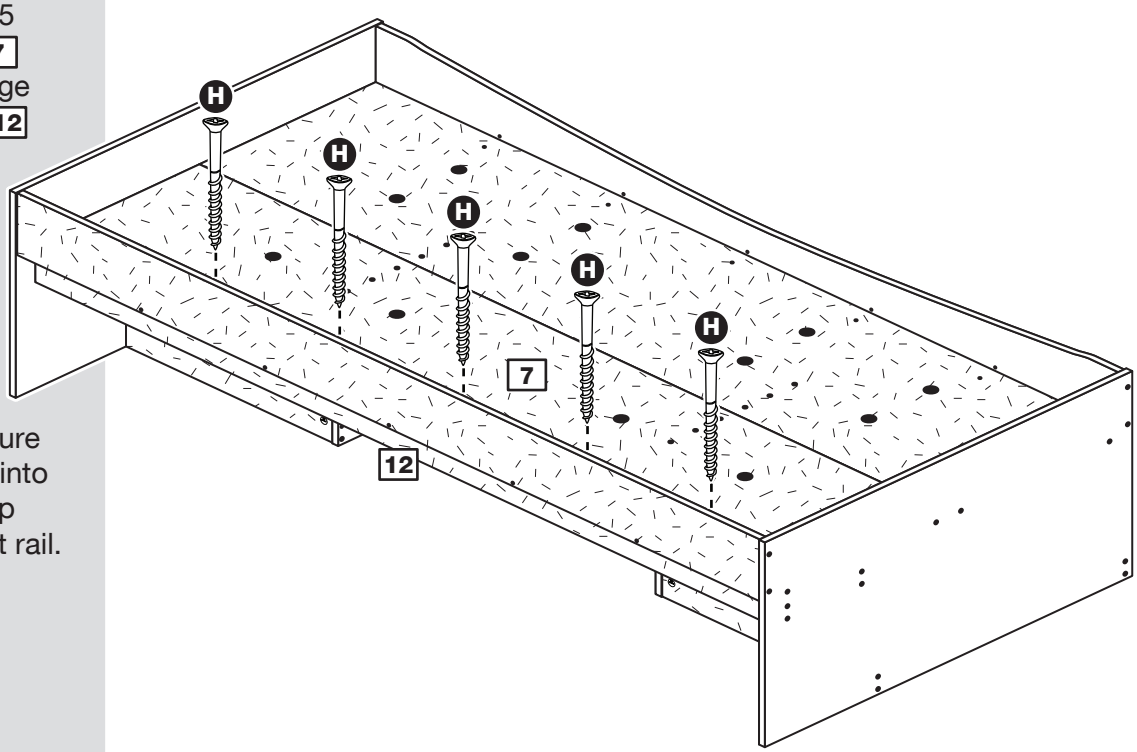

Important: Make sure that the screws go into the centre of the top edge of the support rail.

Step 33

Secure the back rail

Fix the back rail 13 to the back edge of the base 7 using 5 screws H.

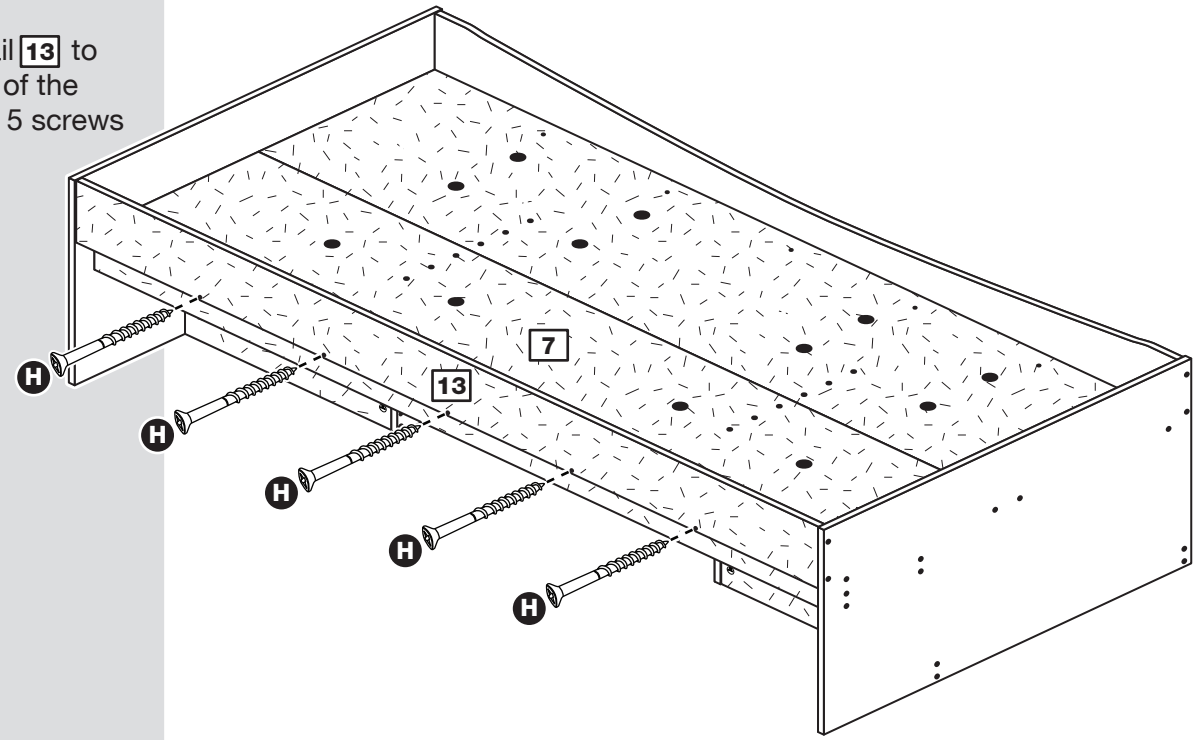

Step 34

Secure the front rail

Loosely fix the 5 brackets Q to the holes in the base 7 using screws K.

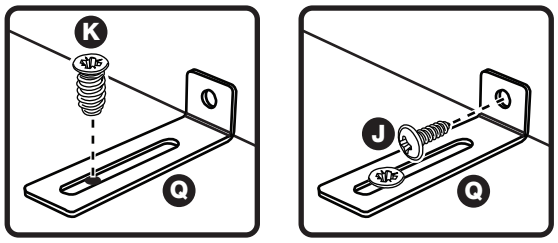

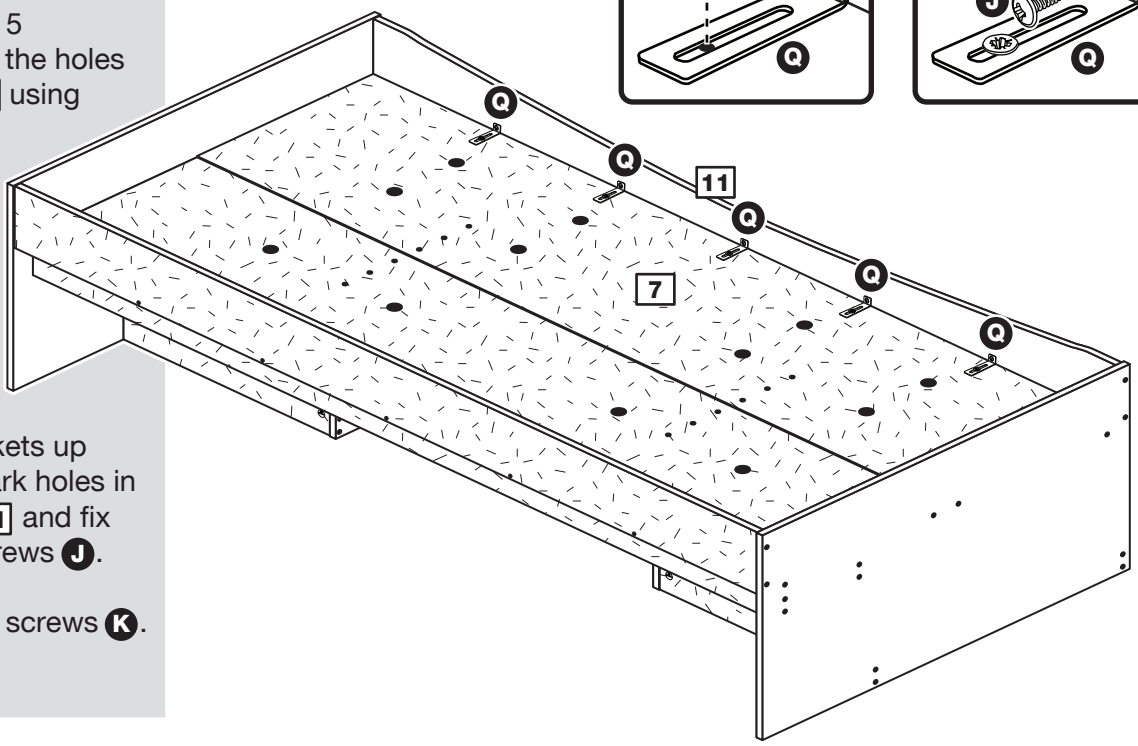

Slide the brackets up against the mark holes in the front rail 11 and fix them using screws J.

Tighten up the screws K.

Step 35

Fit the drawers

Starting with the bottom drawers, slide both the runners S forward and locate the drawer sides 15 and 16 between them, lining up the holes in the drawer wrap with the 2nd 'threaded' holes in the runners S.

Working from the inside of the drawer, insert 2 screws M through the drawer sides and out into the 2nd threaded hole in the runner.

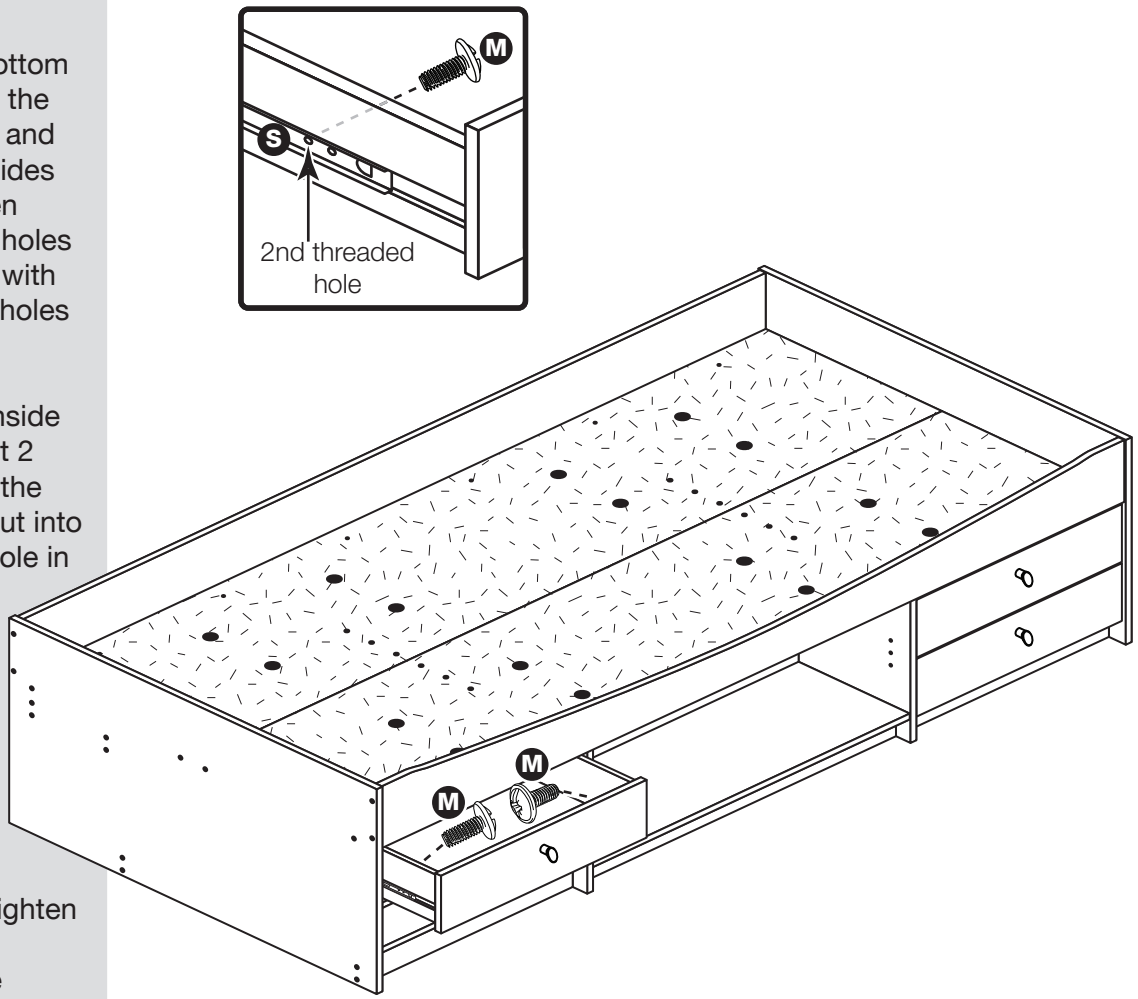

Note: Do not overtighten the screws.
If they catch on the runner you may need to loosen them slightly.

Step 36

Fit the shelf studs

Insert 4 shelf studs U at the required height into the uprights 4 and 5.

Note: **The fitting of the shelf is optional so please ignore steps 36 and 37 if it is not required.**

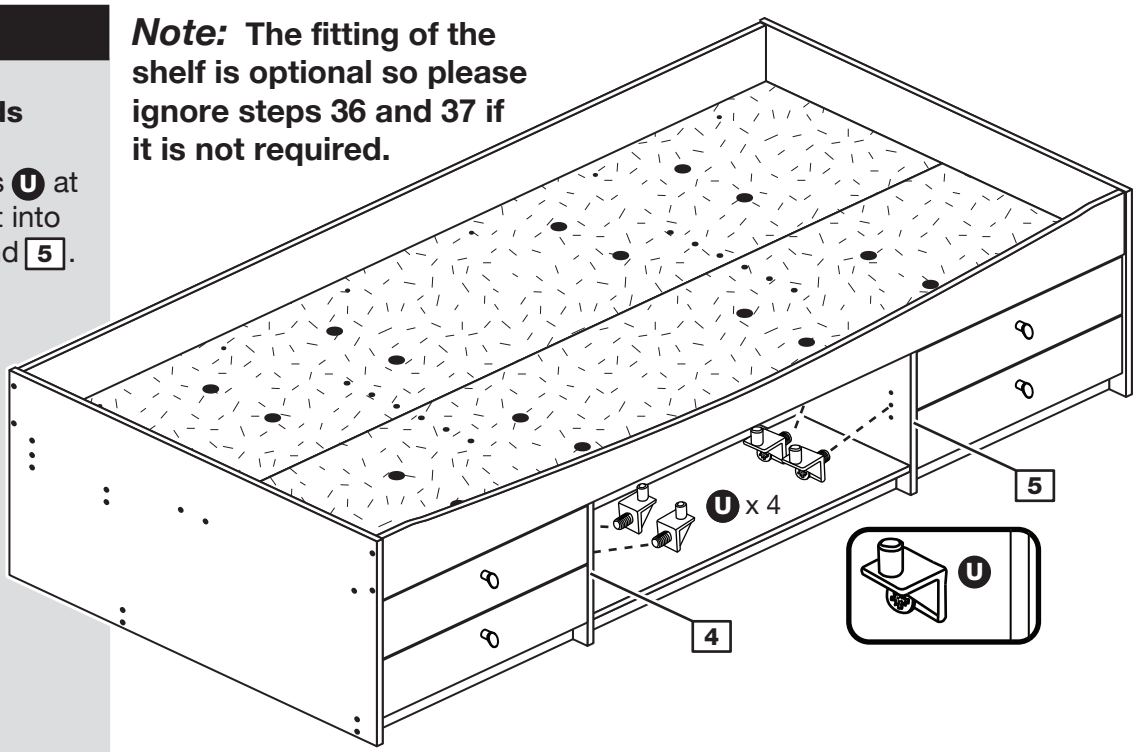

Step 37

Fit the shelf

Lower the shelf 19 down onto the shelf studs U and tighten their screws.

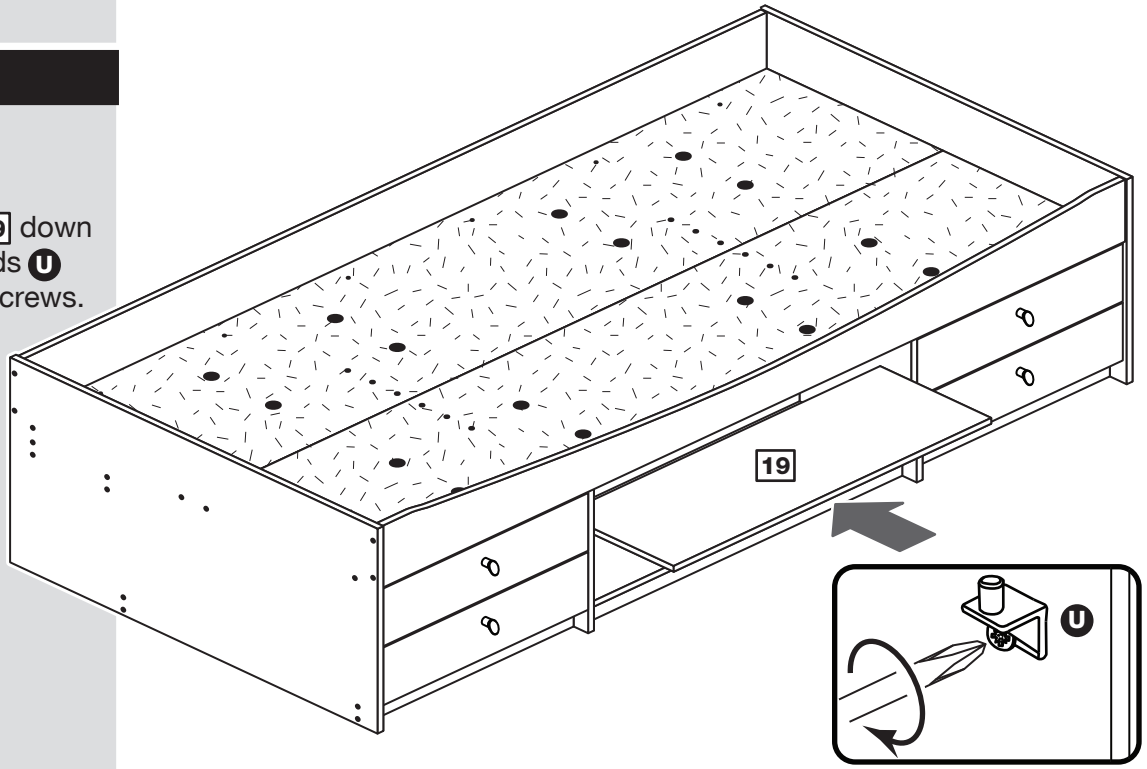

IMPORTANT

On a regular basis please check that the screws and fittings have not become loose as this could present a potential choke hazard.

If you need help or have damaged or missing parts, call the **Customer Helpline: 08456 400800**
and quote the reference numbers on the component pages.
Argos Ltd, 489-499 Avebury Boulevard, Central Milton Keynes, MK9 2NW

Malibu - Cabin Bed

Assembly Instructions - Please keep for future reference

268/5038
275/4433
278/5433
275/7557
249/2032
280/3315

WARNING
NOT SUITABLE FOR CHILDREN UNDER 4 YEARS OF AGE .

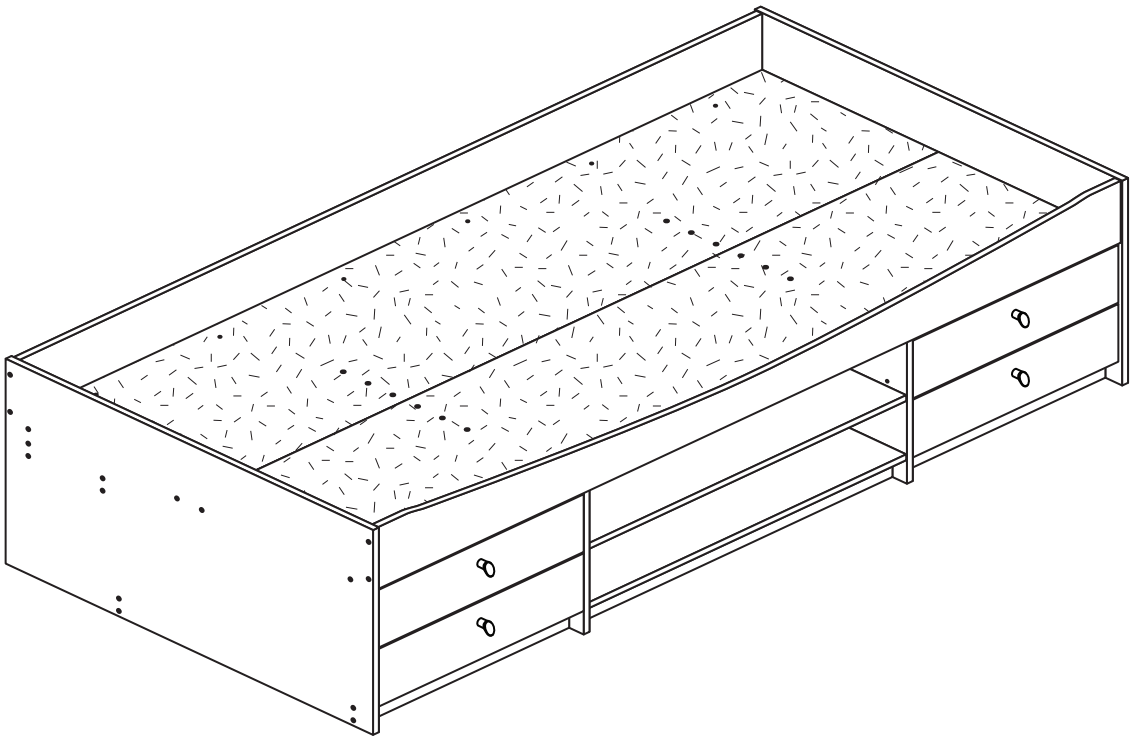

Dimensions
Width - 195cm
Depth - 95cm
Height - 53cm

MADE IN BRITAIN

Important - Please read these instructions fully before starting assembly

If you need help or have damaged or missing parts, call the **Customer Helpline: 03456 400800**

Issue 5 - 15/01/15

Safety and Care Advice

Important - Please read these instructions fully before starting assembly

• ***Warning:*** This unit weighs approximately 66kgs.
Please lift with care.

• Check you have all the components and tools listed on pages 2 and 3.

• Remove all fittings from the plastic bags and separate them into their groups.

• Keep children and animals away from the work area, small parts could choke if swallowed.

• Parts of the assembly will be easier with 2 people.

• Make sure you have enough space to layout the parts before starting.

• Do not stand or put weight on the product, this could cause damage.

• Assemble the item as close to its final position (in the same room) as possible.

• Assemble on a soft level surface to avoid damaging the unit or your floor (use opened out unit carton).

• We do not recommend the use of power drill/drivers ***for inserting screws***, as this could damage the unit. Only use hand screwdrivers.

• **Safety note:** If there is any chance of this unit being pulled over by children etc. it is recommended that the unit is secured to a wall using suitable fixings (not supplied).

• Dispose of all packaging carefully and responsibly.

Care and maintenance

• Only clean using a damp cloth and mild detergent, do no use bleach or abrasive cleaners.

• This product should not be discarded with household waste. Take to your local authority waste disposal centre.

Tools required

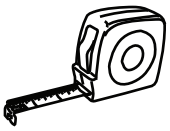

Rule

Cross-head screwdriver

Scissors

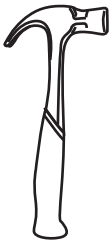

Hammer

Eye protection (when using a hammer or drill)

IMPORTANT
On a regular basis please check that the screws and fittings have not become loose as this could present a potential choke hazard.

Note: If required the next page can be cut out and used as reference throughout the assembly. Keep this page with these instructions for future reference.

Components - Panels

If you have damaged or missing components, call the **Customer Helpline: 03456 400800** *quoting the reference numbers below*

Please check you have all the panels listed below

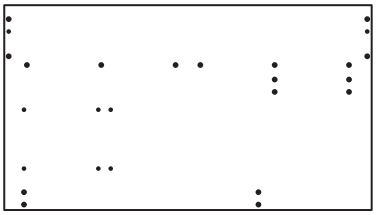

1 Left End *(D2931B)*
(949 x 529mm)

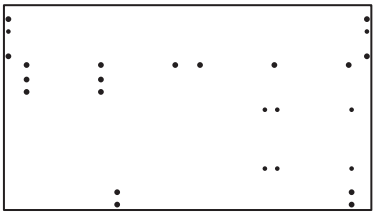

2 Right End *(D2936B)*
(949 x 529mm)

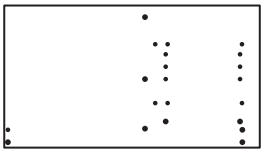

4 Left Upright *(D2937B)*
(367 x 660mm)

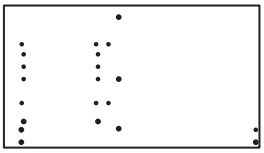

5 Right Upright *(D2929B)*
(367 x 660mm)

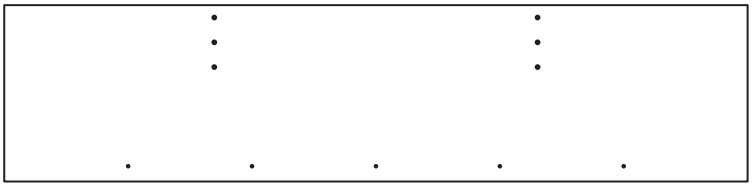

7 Base *(D2928B)*
(1920 x 455.5mm) x 2

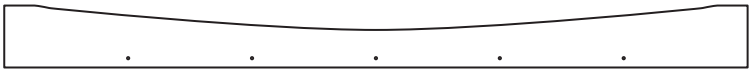

11 Front Rail *(D2938A)*
(1920 x 160mm)

12 Support Rail *(D2939A)*
(1920 x 92mm) x 2

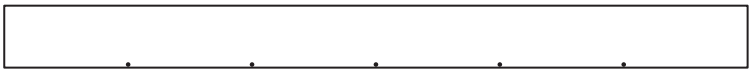

13 Back Rail *(D2926A)*
(1920 x 160mm)

17 Drawer Back *(W502-124)*
(502 x 124mm) x 4

18 Drawer Base *(T513-367)*
(513 x 367mm) x 4

3 Horizontal *(D2932A)*
(820 x 287mm)

6 Back *(D2927A)*
(820 x 367mm)

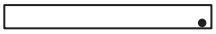

8 Left Plinth *(D2934A)*
(535 x 60mm) x 2

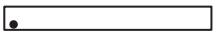

9 Right Plinth *(D2935A)*
(535 x 60mm) x 2

10 Middle Plinth *(D2933A)*
(820 x 60mm)

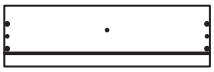

14 Drawer Front *(D2930B)*
(531 x 157mm) x 4

15 Left Drawer Side *(W370-124LH)*
(370 x 124mm) x 4

16 Right Drawer Side *(W370-124RH)*
(370 x 124mm) x 4

19 Shelf *(D3030A)*
(820 x 287mm)

Components - Fittings

If you have damaged or missing components, call the **Customer Helpline: 03456 400800** *quoting the reference numbers below*

Please check you have all the fittings listed below

Note: The quantities below are the correct amount to complete the assembly. In some cases more fittings may be supplied than are required.

A Wooden dowel *(F22)* x 16	**B** Metal dowel *(F901)* x 10	**C** Knock-in Peg *(F171GY)* x 16
D Large wooden dowel *(F40)* x 2	**E** Large locking nut *(F900)* x 6	**F** Small locking nut *(F3)* x 8
G 50mm Screw *(F49)* x 48	**H** 45mm Screw *(F65)* x 10	**I** 25mm Screw *(F50)* x 4
J 13mm Screw *(F79)* x 5	**K** 13mm Screw *(F52)* x 5	**L** 9mm Screw *(F73)* x 16
M 9mm Screw *(F74)* x 8	**N** Plastic Nail *(F91)* x 10	**O** Allen Key *(F36)* x 1
P Wedgefix *(F639)* x 8	**Q** Bracket *(F327)* x 5	**R** Handle *(F631)* x 4
S Drawer runner *(F1004)* x 8		**T** Double metal dowel *(F566)* x 2
U Shelf stud *(F372)* x 4		

Ruler - Use this ruler to help correctly identify the screws

mm 10 20 30 40 50 60 70 80 90 100 110 120 130 140 150 160 170

Assembly Instructions

If you have damaged or missing components, call the **Customer Helpline: 03456 400800** *quoting the reference numbers below*

Step 1

Prepare the 4 drawer fronts

Screw 2 metal dowels B into each of the 4 drawer fronts 14.

Note: Tighten the metal dowels up fully against the panels.

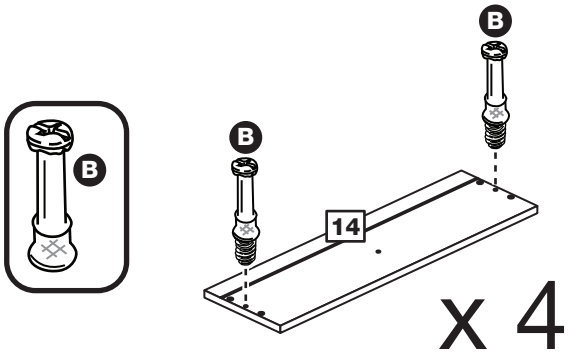

Step 2

Prepare 4 pairs of drawer sides

Insert a small locking nut F into the hole shown on the left drawer side 15 and the right drawer side 16.

Note: The arrow on the locking nut **must** point towards the hole in the edge of the panel.

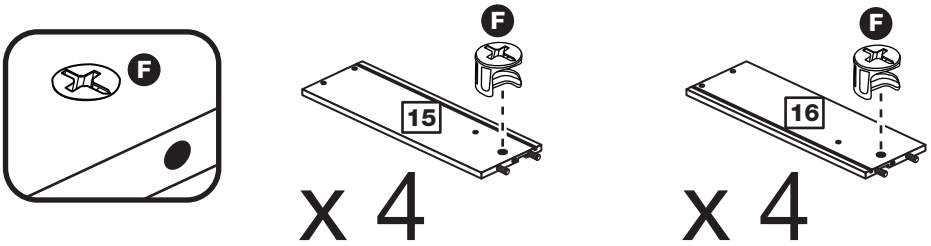

Step 3

Attach the drawer sides to the drawer fronts

Push the left drawer sides 15 and right drawer sides 16 onto the back of the 4 drawer fronts 14.

Turn the small locking nuts F on the left drawer side 15 and right drawer side 16.

Note: Turn the locking nuts F clockwise to secure panels - more than 1/2 a turn.

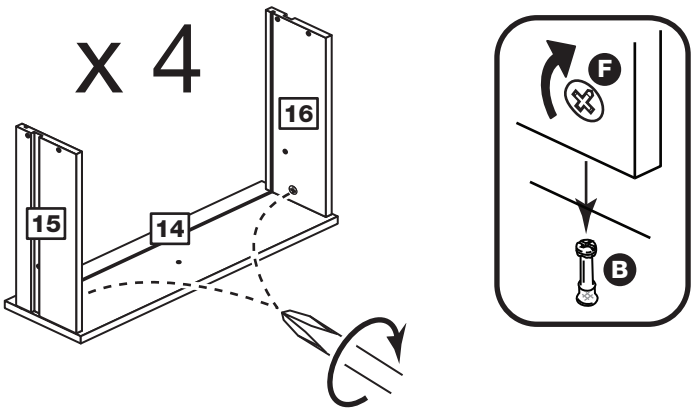

Assembly Instructions

Step 4

Fit the drawer base

Slide the drawer base 18 down the grooves in the drawer sides 15 and 16 and down into the groove in the drawer front 14.

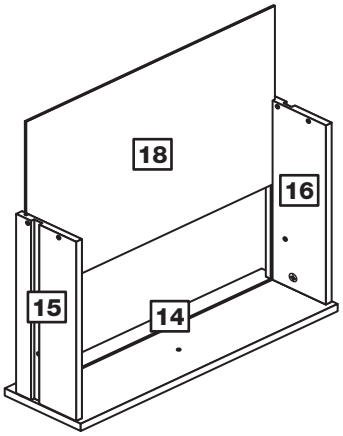

x 4

Step 5

Fit the drawer back

Fit the drawer back 17 between the drawer sides 15 and 16. Make sure that the drawer base 18 fits into the groove in the drawer back 17.

Hold the drawer back 17 in position and tap the knock-in pegs C through the holes in the drawer sides 15 and 16.

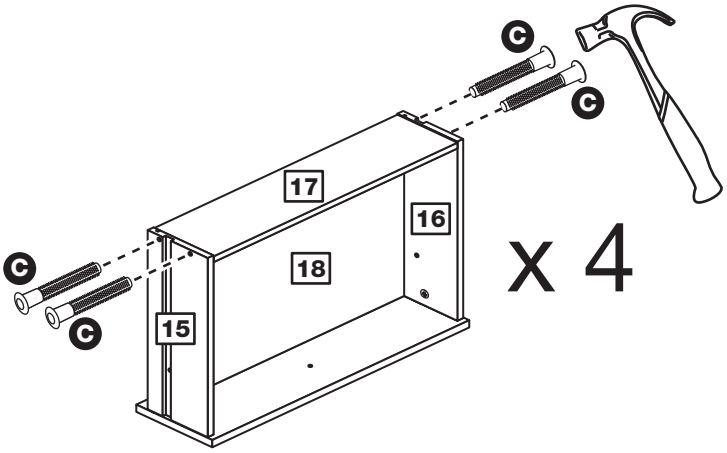

x 4

Step 6

Attach the handles

Attach a handle R to each of the drawer fronts 14 using screw I.

Note: Do not overtighten the screw.

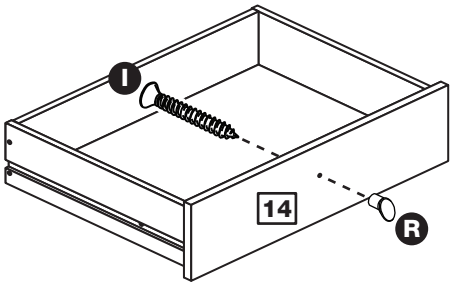

x 4

Step 7

Fit the wedgefixes

Turn the drawer assemblies over and slide 2 wedgefixes P into the front and back grooves, as shown, and tighten up the screws.

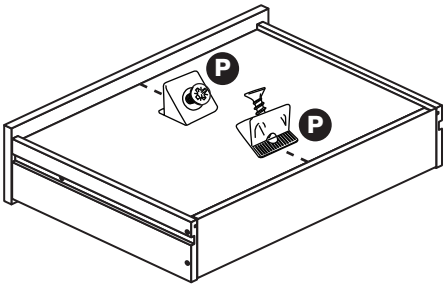

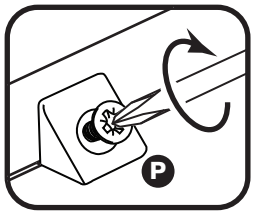

x 4

Step 8

Prepare the left upright

a: Tap 2 wooden dowels (A) into the left upright [4].

Screw a metal dowel (B) into the left upright [4].

Place 2 runners (S) on the left upright [4] as shown. Slide back the top of runner and use the 2nd hole from the front to fit the 1st screw (L).

b: Slide the runner (S) back the other way and fit the 2nd screw (L) into the corresponding hole in the left upright [4].

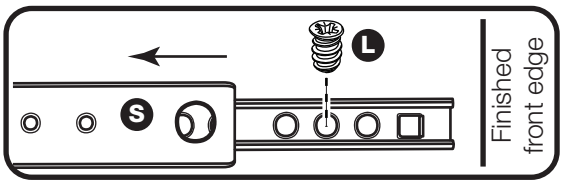

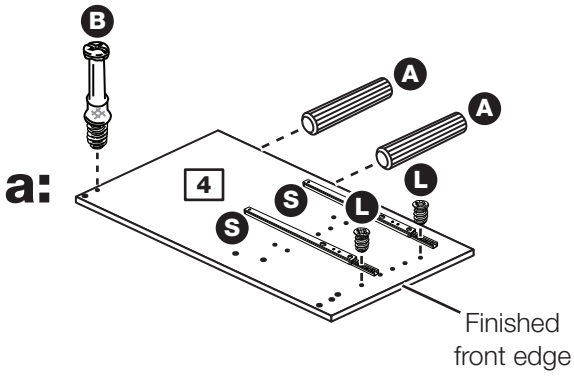

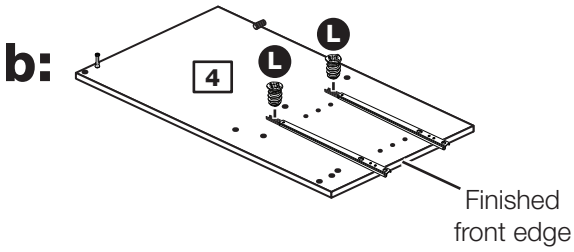

Step 9

Prepare the right upright

a: Tap 2 wooden dowels (A) into the right upright [5].

Screw a metal dowel (B) into the right upright [5].

Place 2 runners (S) on the right upright [5] as shown. Slide back the top of runner and use the 2nd hole from the front to fit the 1st screw (L).

b: Slide the runner (S) back the other way and fit the 2nd screw (L) into the corresponding hole in the right upright [5].

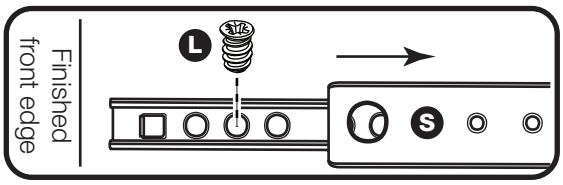

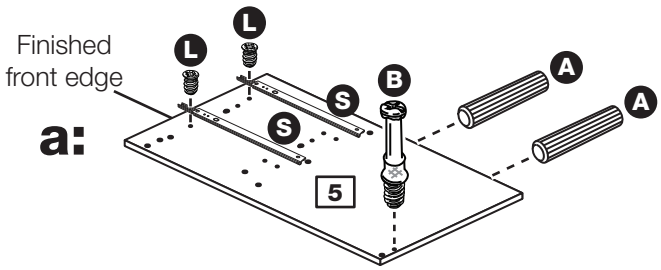

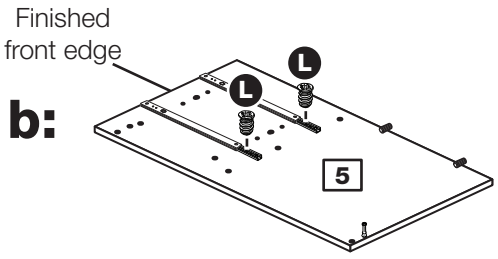

Step 10

Fit the horizontal to the right upright

Fit the horizontal 3 onto the right upright 5 using 2 screws G and the allen key O.

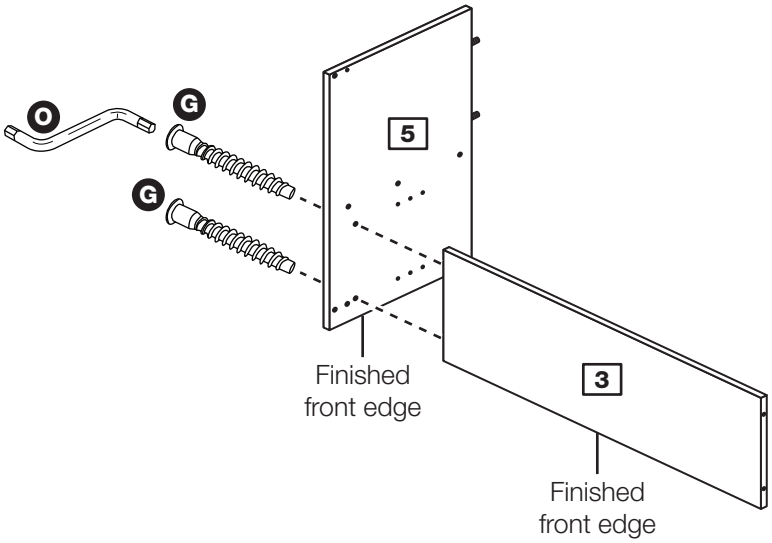

Step 11

Prepare the middle plinth

Insert 2 large locking nuts E into the middle plinth 10.

Note: The arrow on the locking nut **must** point towards the hole in the edge of the panel.

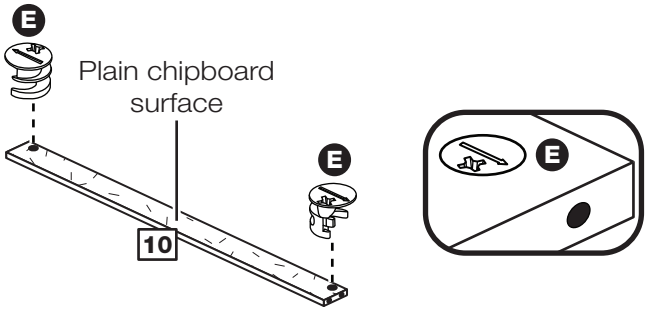

Step 12

Fit the middle plinth

a: Tap a double metal dowel T and a large wooden dowel D through the right upright 5 and into the middle plinth 10 until they ''bottom out".

b: Use a screwdriver to tighten the large locking nut E fitted to the middle plinth 10.

Note: Turn the large locking nuts E as far as they will go - more than 1/2 a turn.

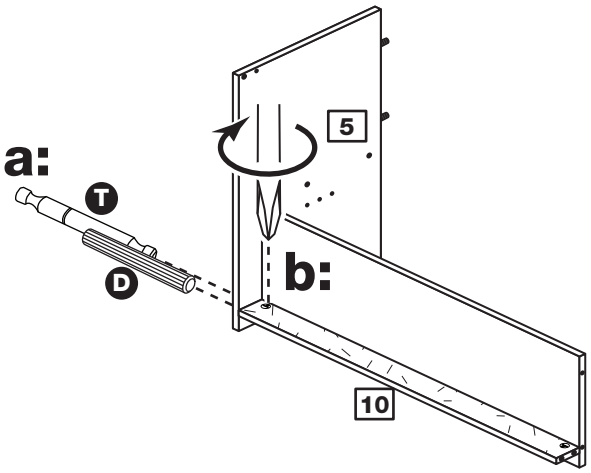

Important: It is critical that the middle plinth is asssembled with the large locking nuts at the top.

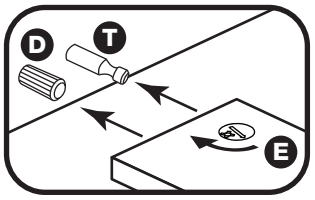

Step 13

Prepare the back

Tap 2 wooden dowels A into the back 6.

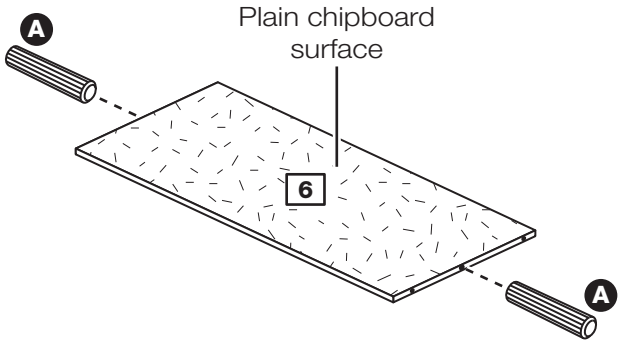

Step 14

Fit the back

Push the back 6 onto the right upright 5 and fix it using 2 screws G and the allen key O.

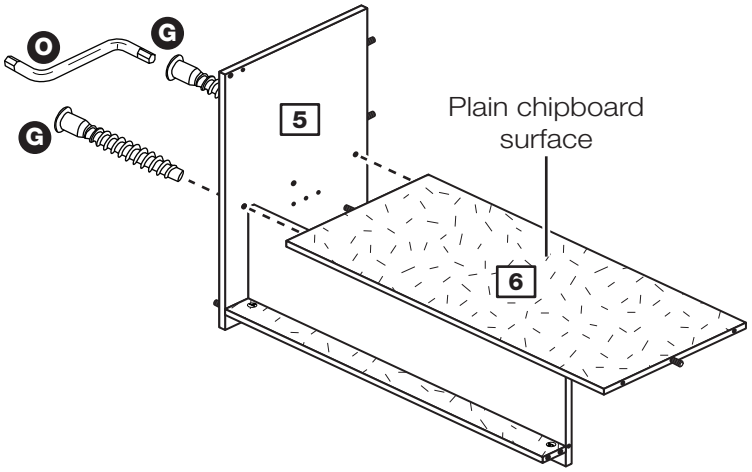

Step 15

Fit the left upright

Push the left upright 4 onto the assembly and fix it using 4 screws G and the allen key O.

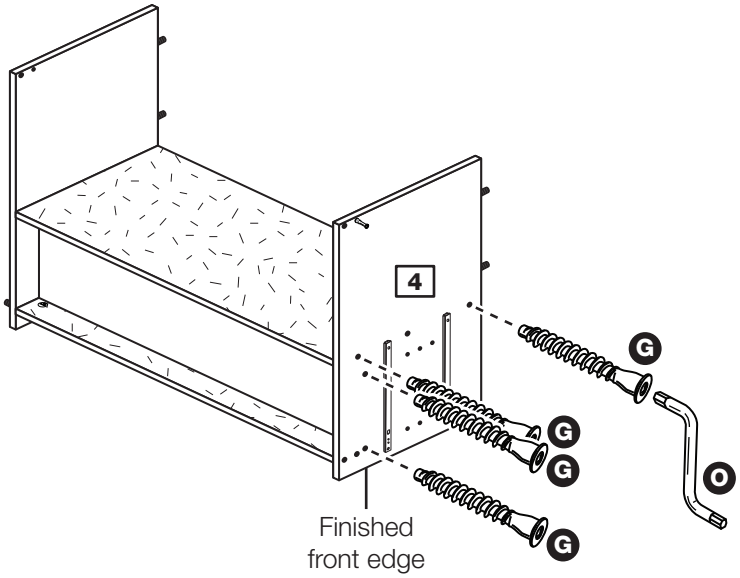

Step 16

Secure the middle plinth to the left upright

a: Tap a double metal dowel T and a large wooden dowel D through the left upright 4 and into the middle plinth 10 until they ''bottom out".

b: Use a screwdriver to tighten the large locking nut E fitted to the middle plinth 10.

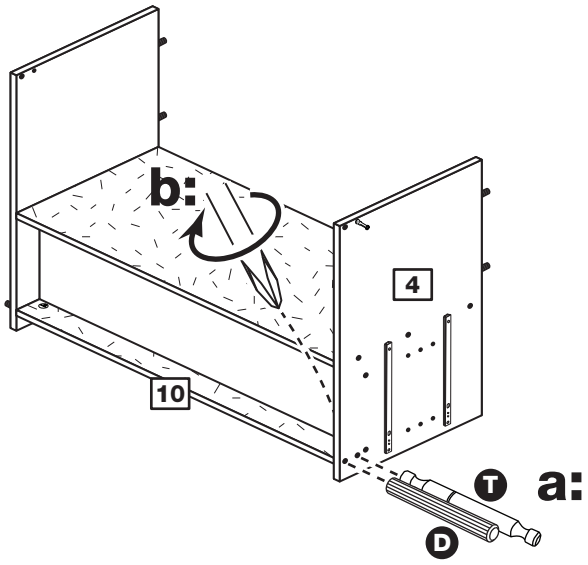

Step 17

Fit the 4 plastic nails

Tap 2 plastic nails N into the bottom edge of each of the uprights 4 and 5.

Carefully stand the assembly up.

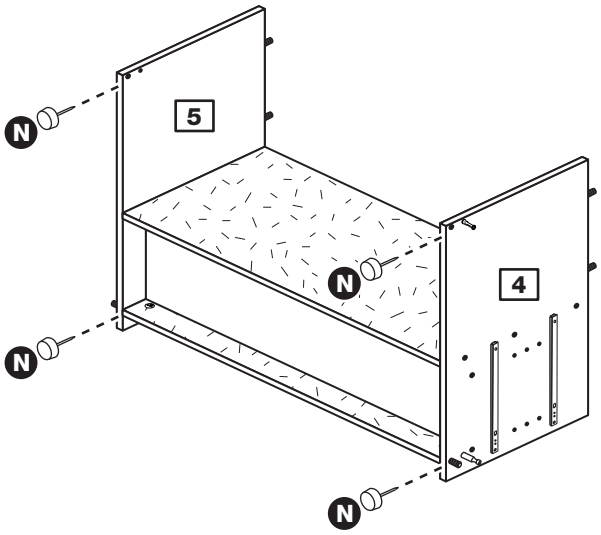

Step 18

Prepare the 2 left plinths

Tap a wooden dowel A into just 1 of the 2 left plinths 8.

Insert a large locking nut E into each of the 2 left plinths 8.

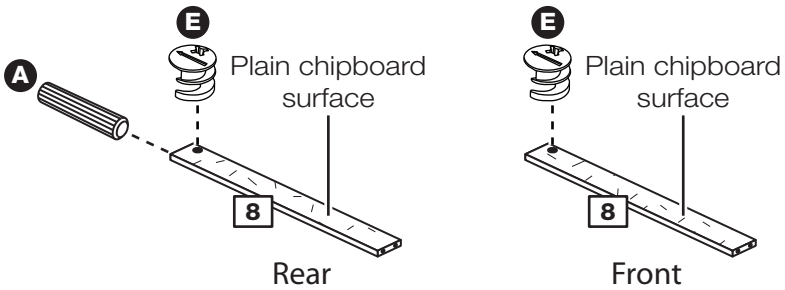

Step 19

Fit the left plinths to the left upright

Push the left plinths 8 onto the left upright 4.

Use a screwdriver to tighten the large locking nuts E fitted to the left plinths 8.

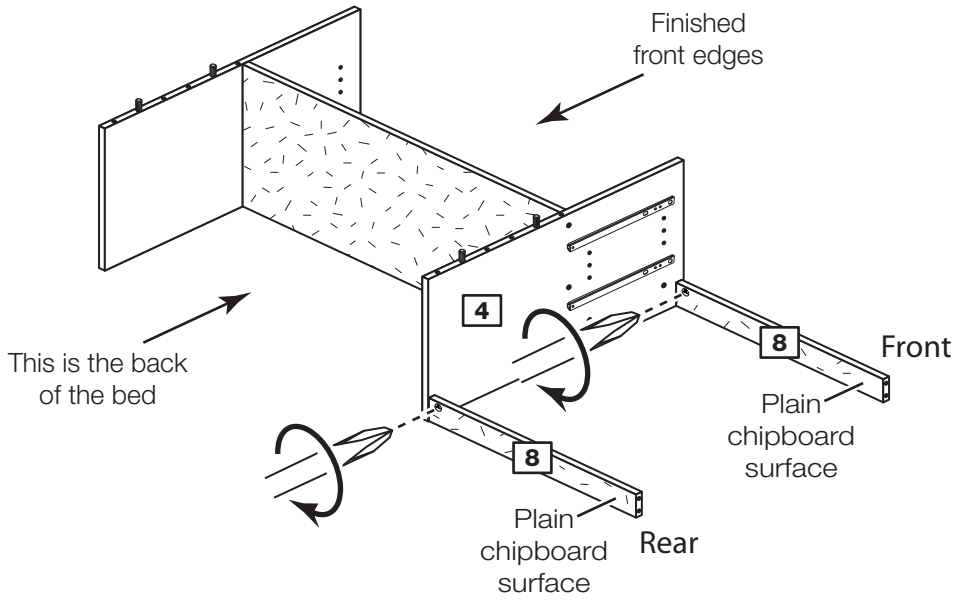

Step 20

Prepare the 2 right plinths

Tap a wooden dowel A into just 1 of the 2 right plinths 9.

Insert a large locking nut E into each of the 2 right plinths 9.

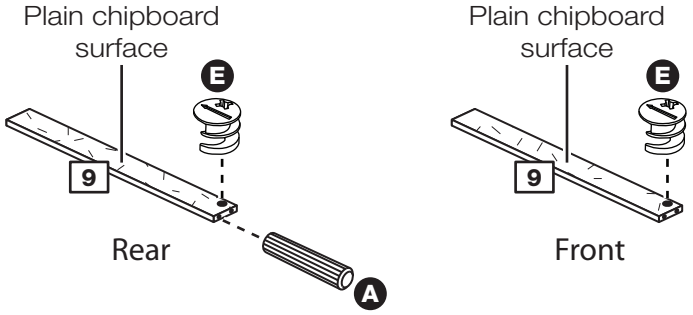

Step 21

Fit the right plinths to the right upright

Push the right plinths 9 onto the right upright 5.

Use a screwdriver to tighten the large locking nuts E fitted to the right plinths 9.

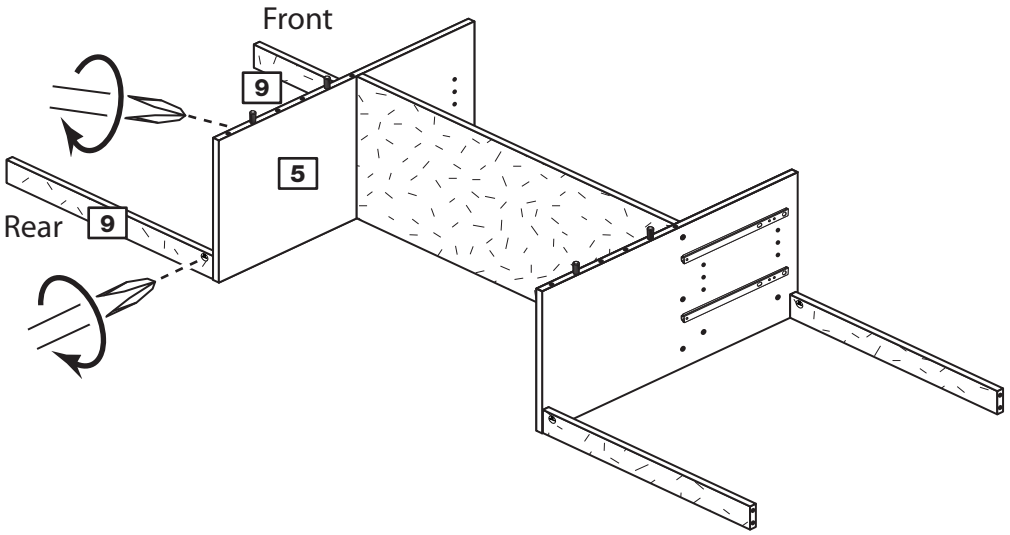

Step 22

Prepare the 2 bases

Tap 2 wooden dowels A into each of the 2 bases 7.

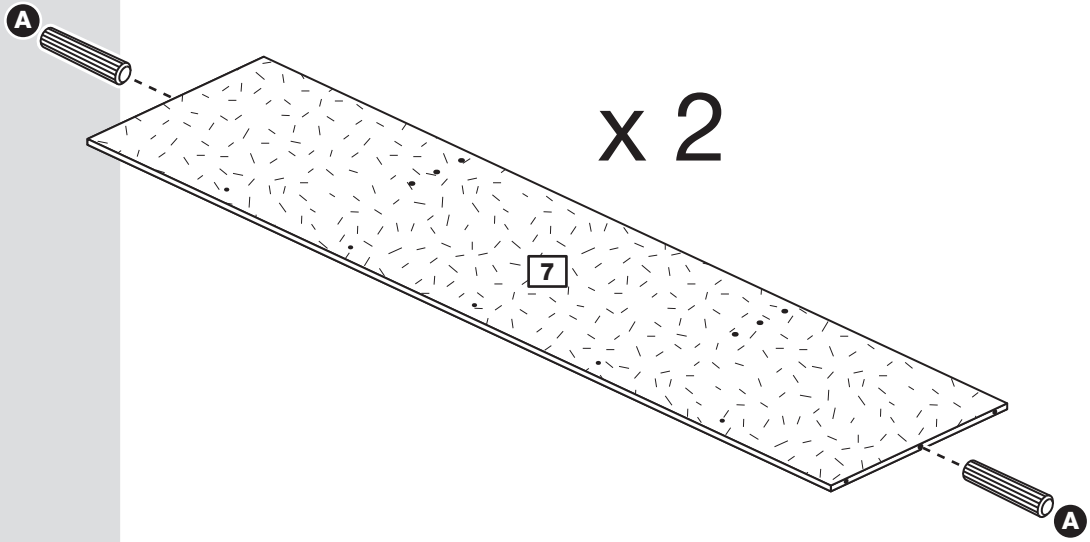

Step 23

Fit a base

Fit a base 7 down onto the 2 uprights 4 and 5 using 4 screws G and the allen key O.

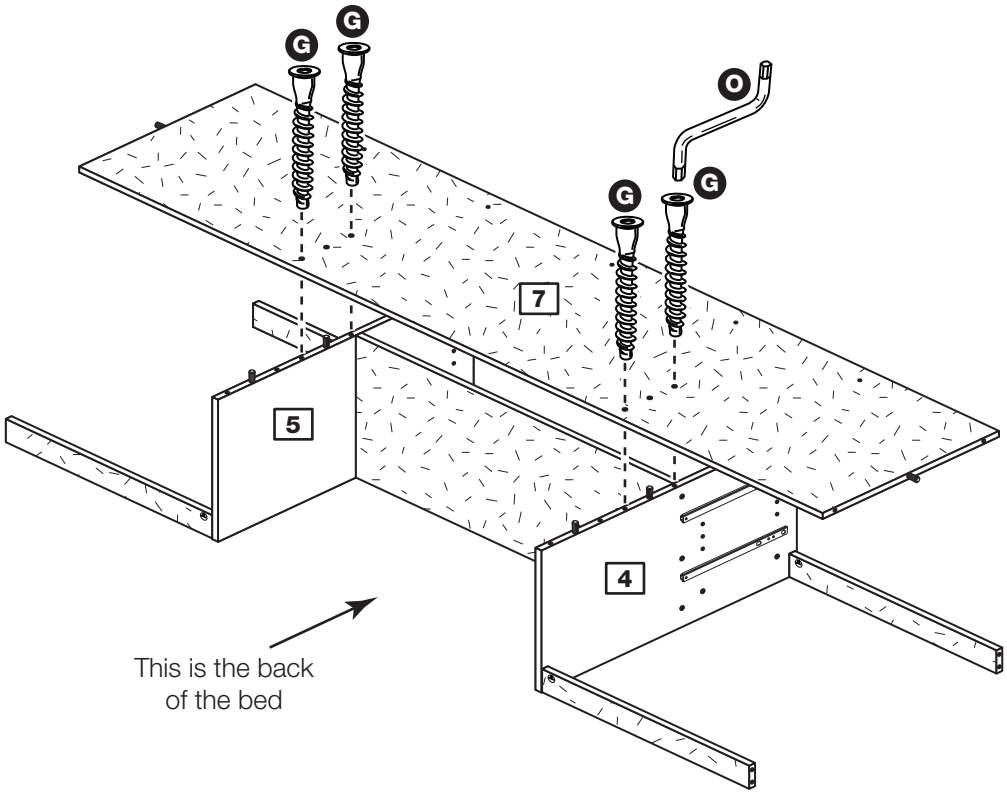

Step 24

Fit the other base

2 people are needed to asssemble this part

Fit the other base 7 down onto the 2 uprights 4 and 5 using 4 screws G and the allen key O.

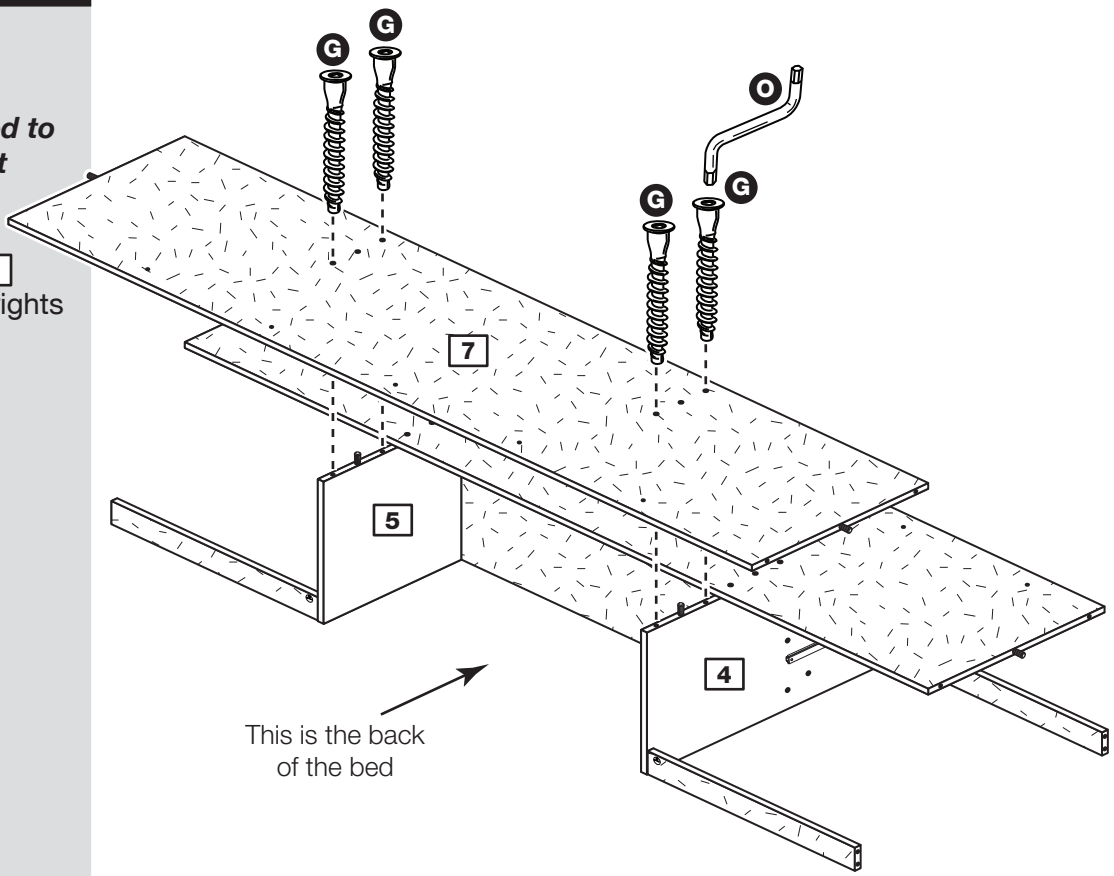

Step 25

Prepare the right end

a: Place 2 runners S on the right end 2 as shown. Slide back the top of runner and use the 2nd hole from the front to fit the 1st screw L.

b: Slide the runner S back the other way and fit the 2nd screw L into the corresponding hole in the right end 2.

Tap 3 plastic nails N into the bottom edge of each of the right end 2.

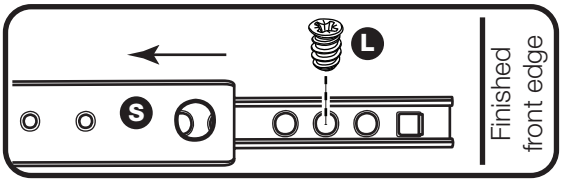

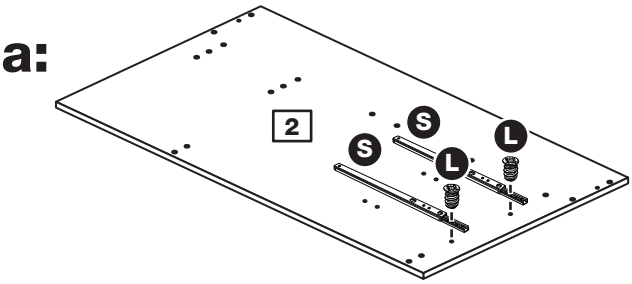

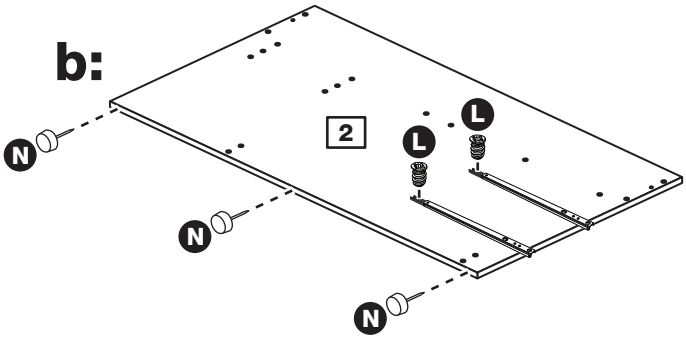

Step 26

Prepare the left end

a: Place 2 runners S on the left end 1 as shown. Slide back the top of runner and use the 2nd hole from the front to fit the 1st screw L.

b: Slide the runner S back the other way and fit the 2nd screw L into the corresponding hole in the left end 1.

Tap 3 plastic nails N into the bottom edge of each of the left end 1.

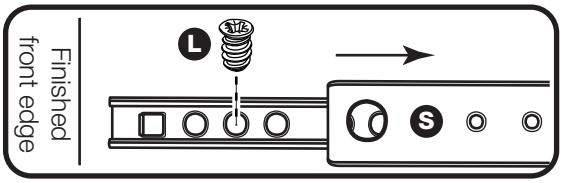

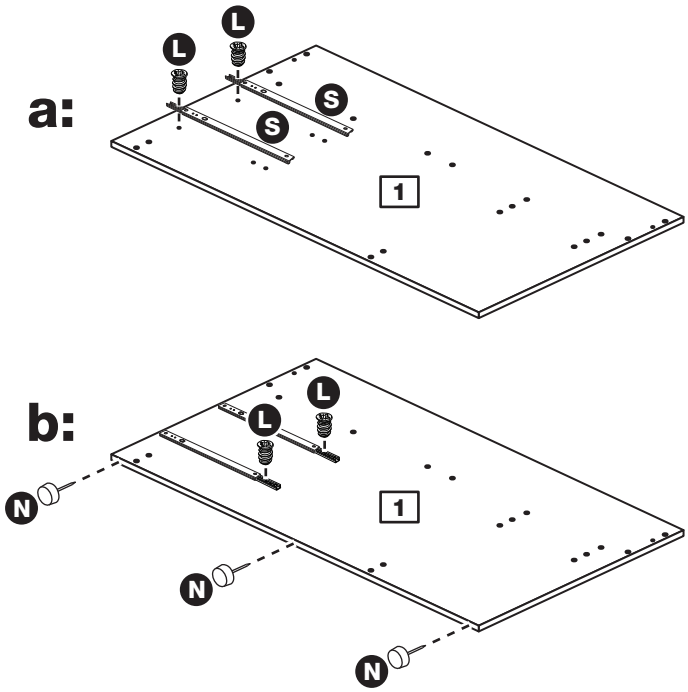

Step 27

Fit the left end

Fit the left end 1 onto the assembly using 8 screws G and the allen key O.

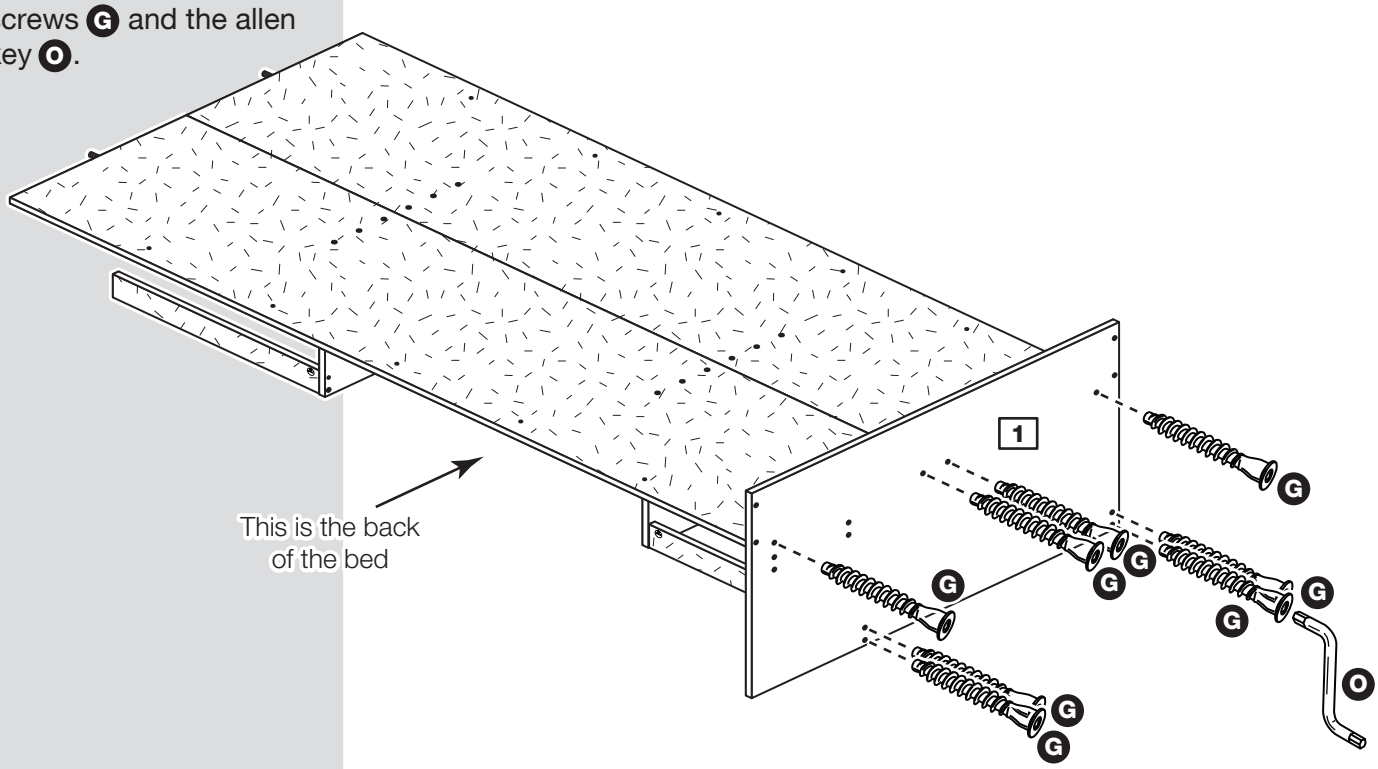

Step 28

Fit the 2 support rails

Fit the 2 support rails 12 to the left end 1 using 2 screws G for each rail and the allen key O.

Note: Use 2 people for this step and support the 2 support rails until the right end has been fitted.

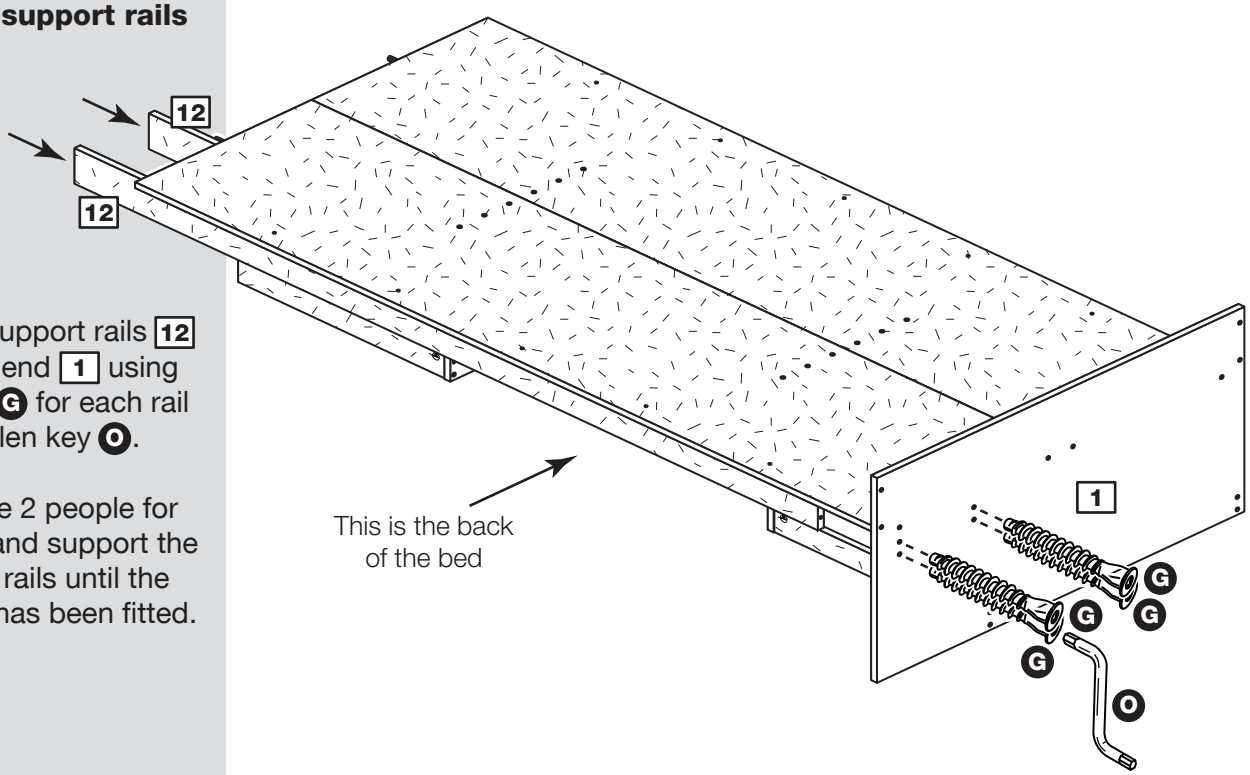

Step 29

Prepare the front rail and back rail

Tap 2 wooden dowels A into the front rail 11.

Tap 2 wooden dowels A into the back rail 13.

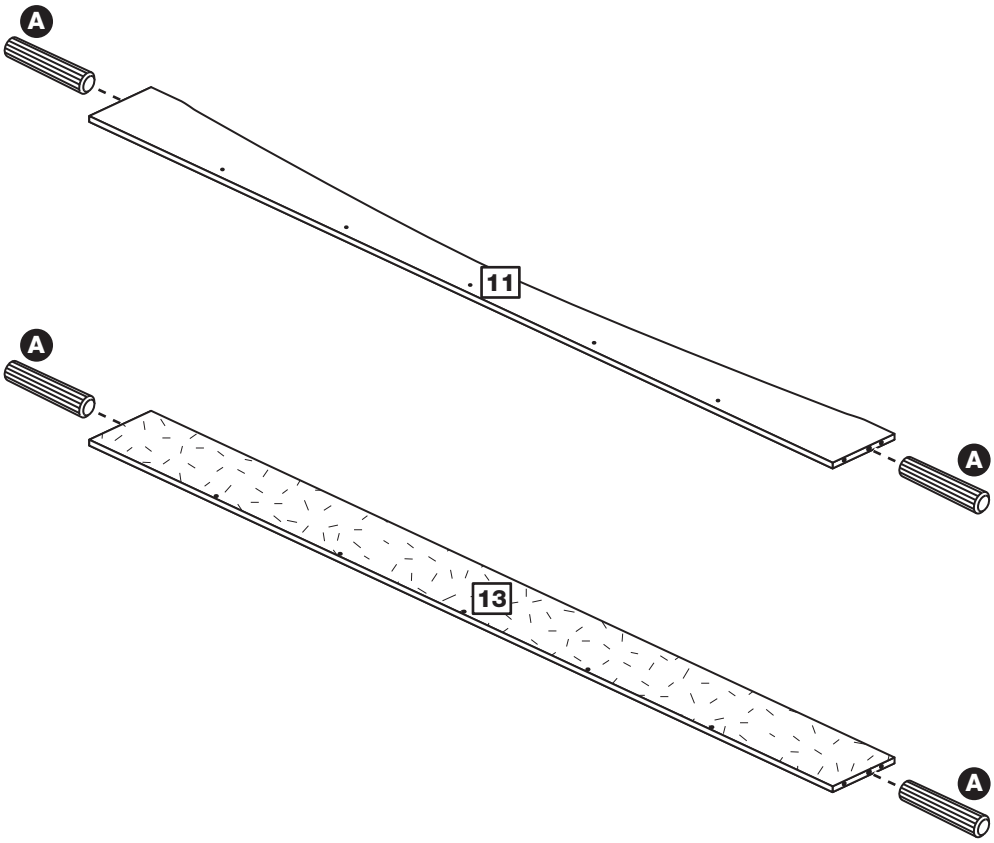

Step 30

Fit the front rail and back rail

Fit the front rail 11 to the left end 1 using 2 screws G and the allen key O.

Fit the back rail 13 to the left end 1 using 2 screws G and the allen key O.

Note: Support the front and back rail until the right end has been fitted.

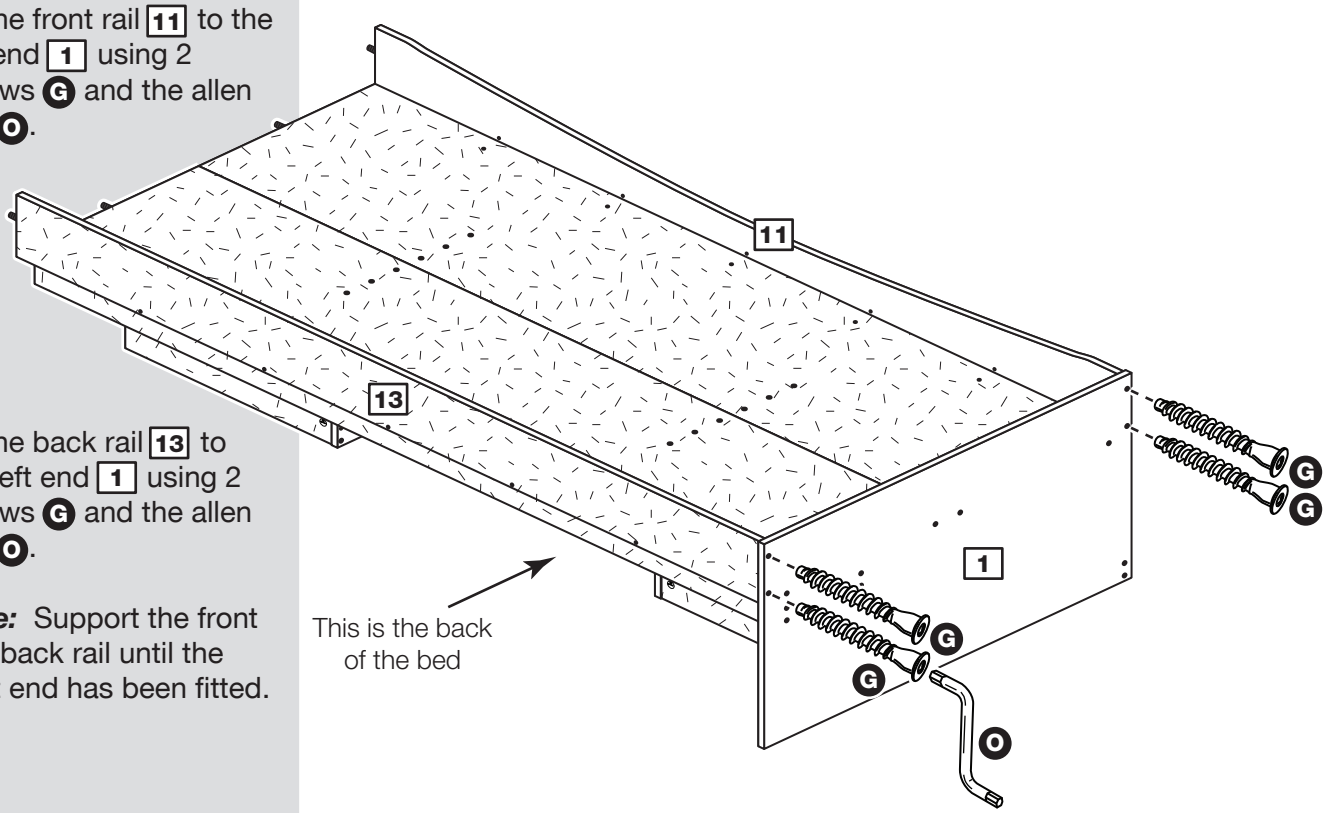

Step 31

Fit the right end

Fit the right end 2 onto the assembly using 16 screws G and the allen key O.

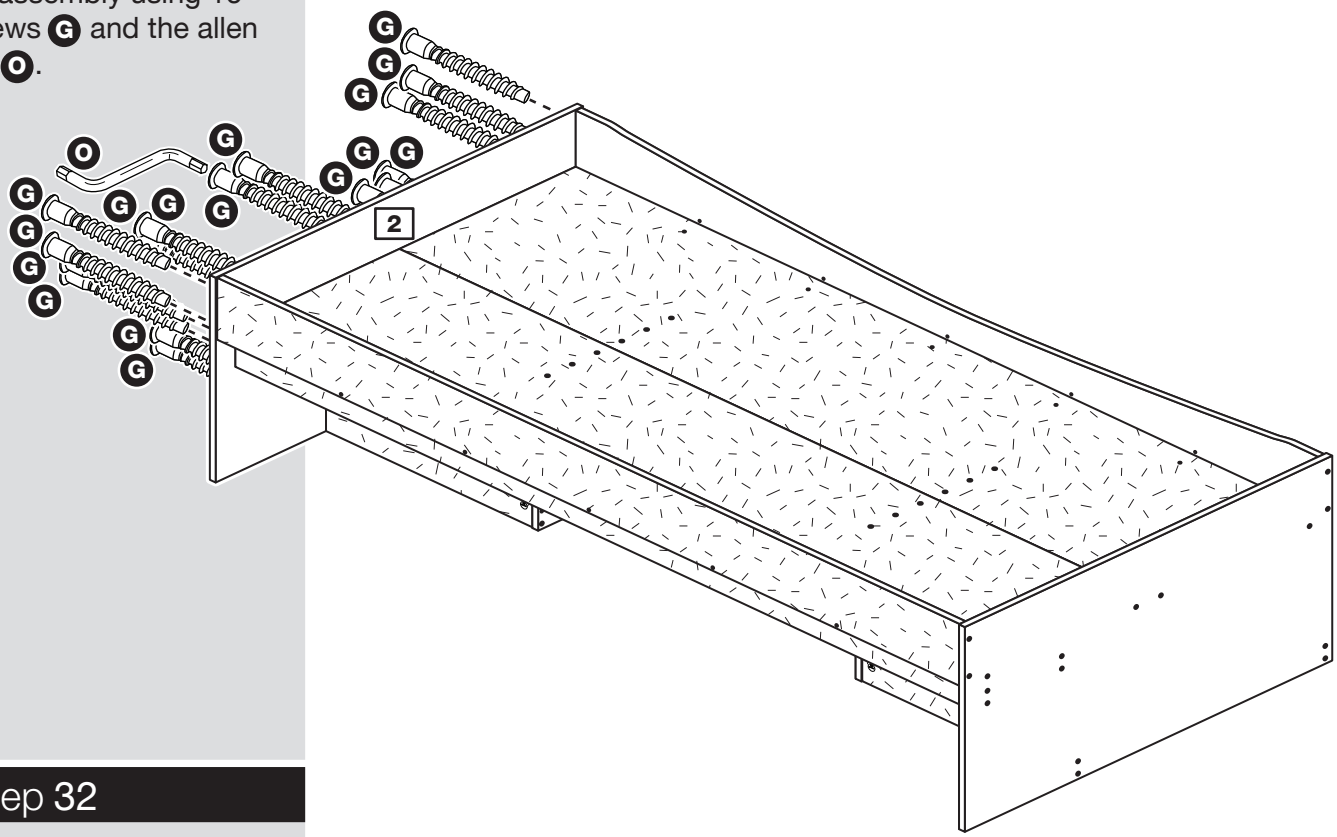

Step 32

Secure the rear support rail

Screw through the 5 holes in the base 7 and into the top edge of the support rail 12 using 5 screws H.

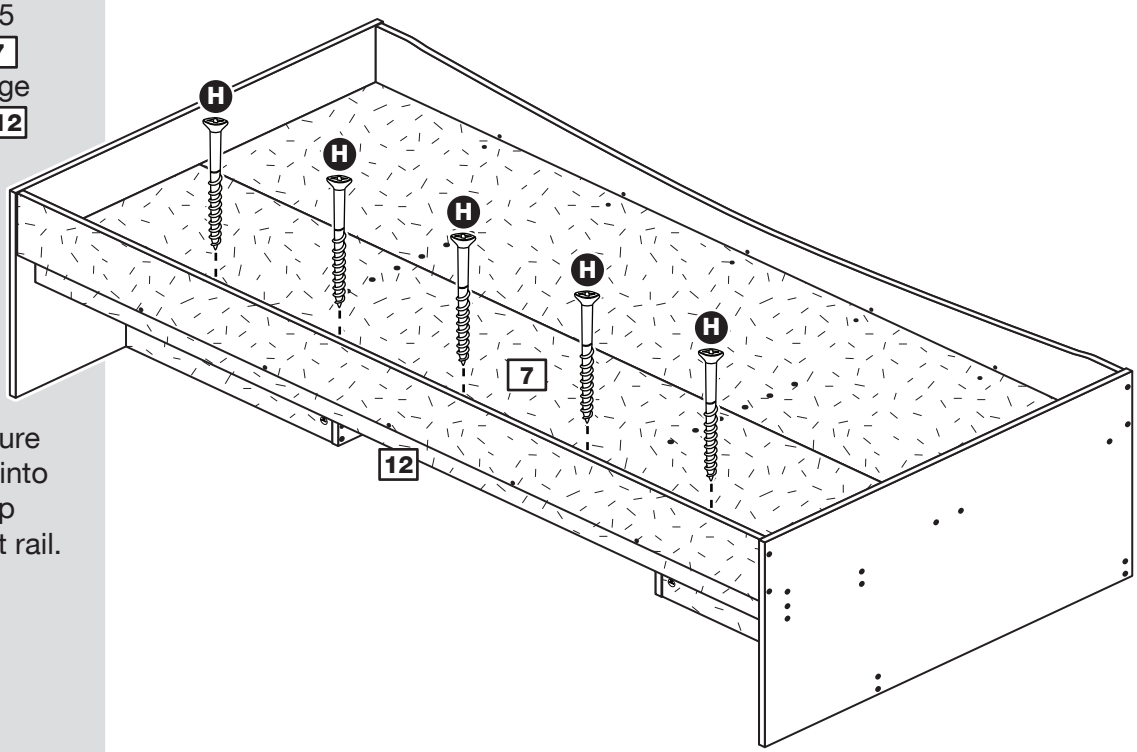

Important: Make sure that the screws go into the centre of the top edge of the support rail.

Step 33

Secure the back rail

Fix the back rail 13 to the back edge of the base 7 using 5 screws H.

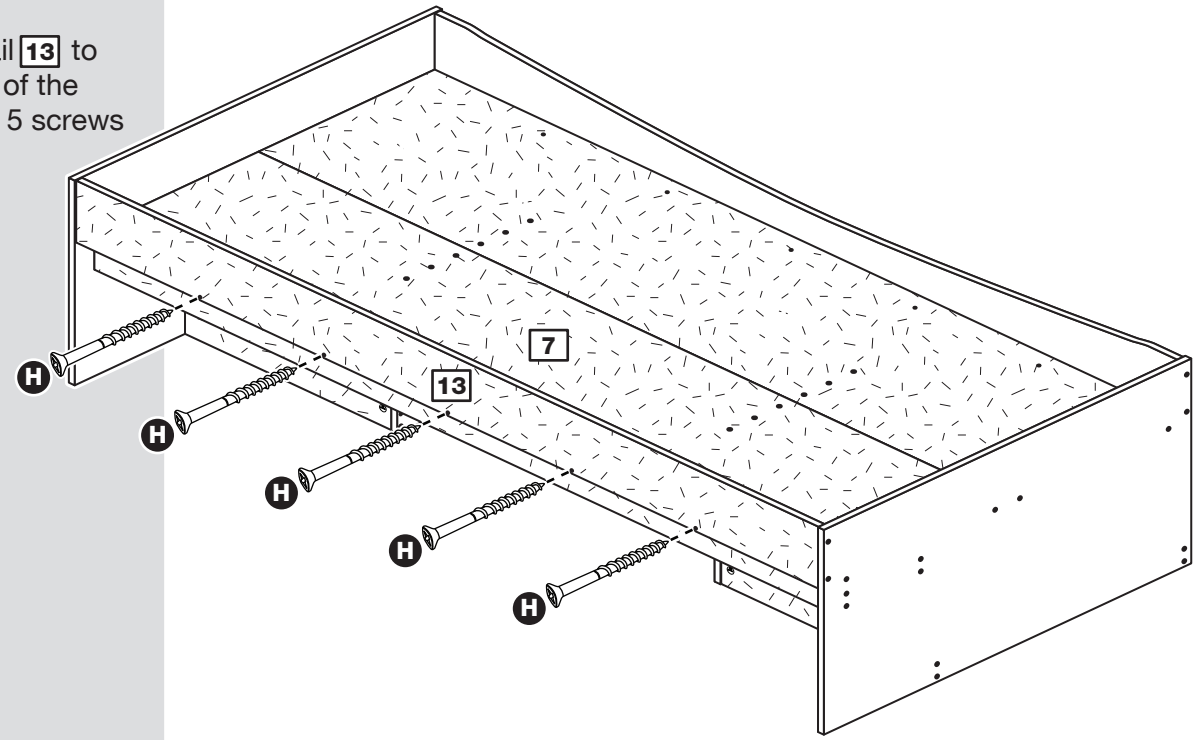

Step 34

Secure the front rail

Loosely fix the 5 brackets Q to the holes in the base 7 using screws K.

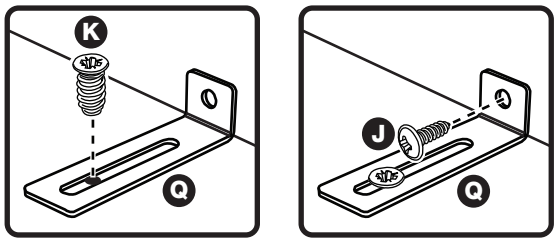

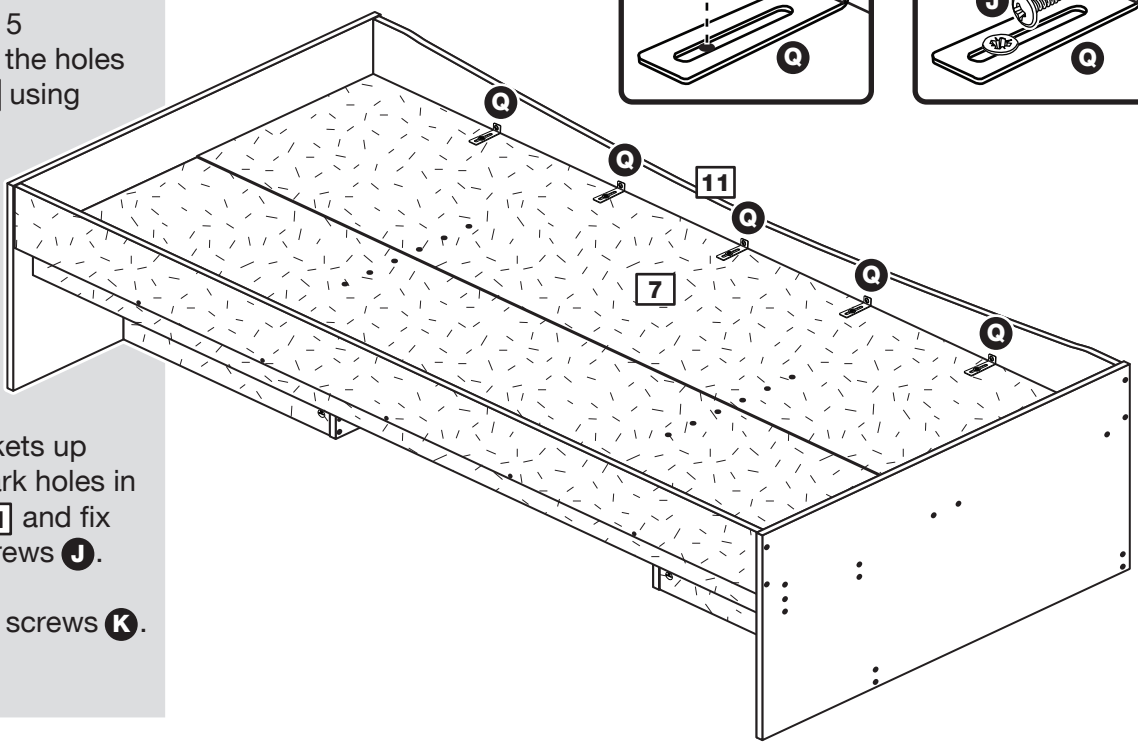

Slide the brackets up against the mark holes in the front rail 11 and fix them using screws J.

Tighten up the screws K.

Step 35

Fit the drawers

Starting with the bottom drawers, slide both the runners S forward and locate the drawer sides 15 and 16 between them, lining up the holes in the drawer wrap with the 2nd 'threaded' holes in the runners S.

Working from the inside of the drawer, insert 2 screws M through the drawer sides and out into the 2nd threaded hole in the runner.

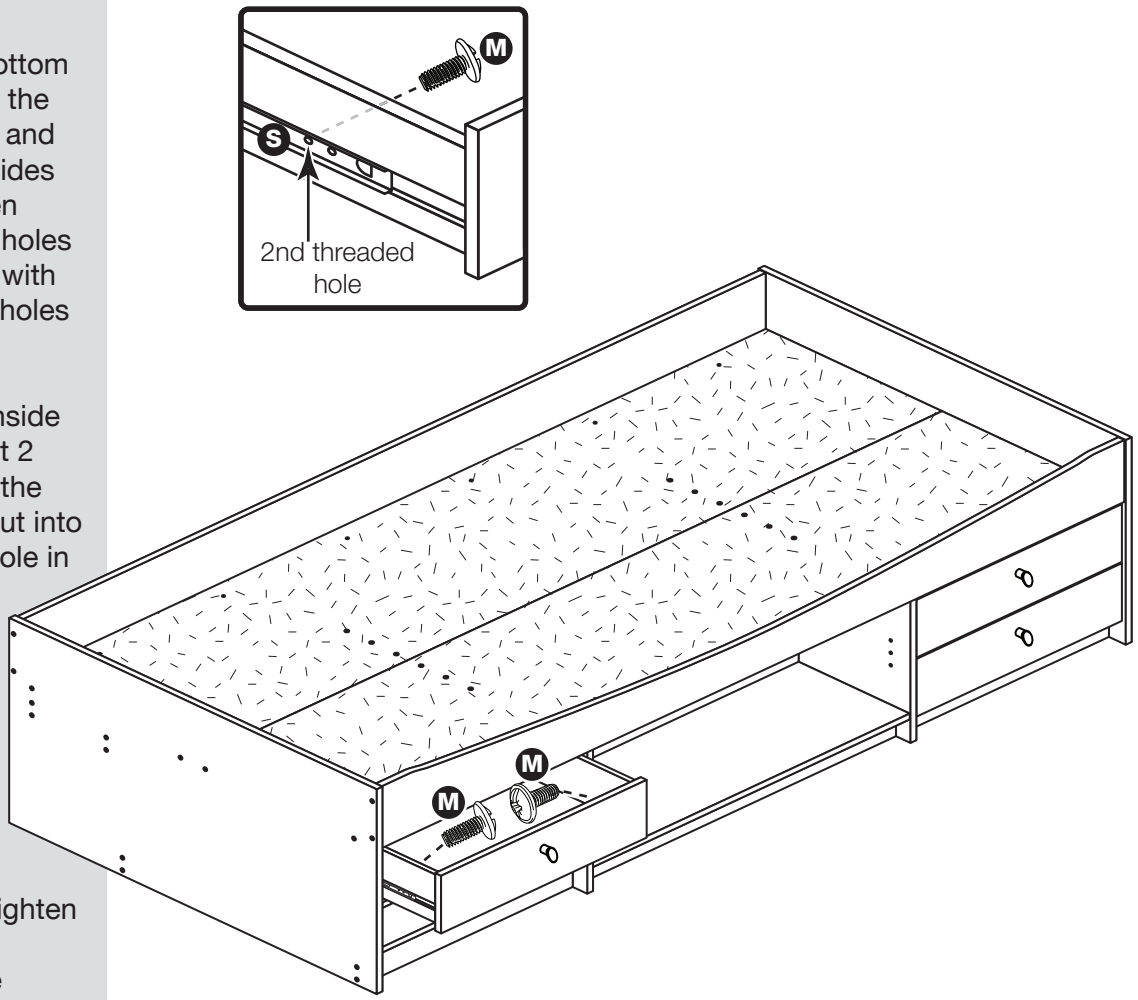

Note: Do not overtighten the screws.
If they catch on the runner you may need to loosen them slightly.

Step 36

Fit the shelf studs

Insert 4 shelf studs U at the required height into the uprights 4 and 5.

Note: **The fitting of the shelf is optional so please ignore steps 36 and 37 if it is not required.**

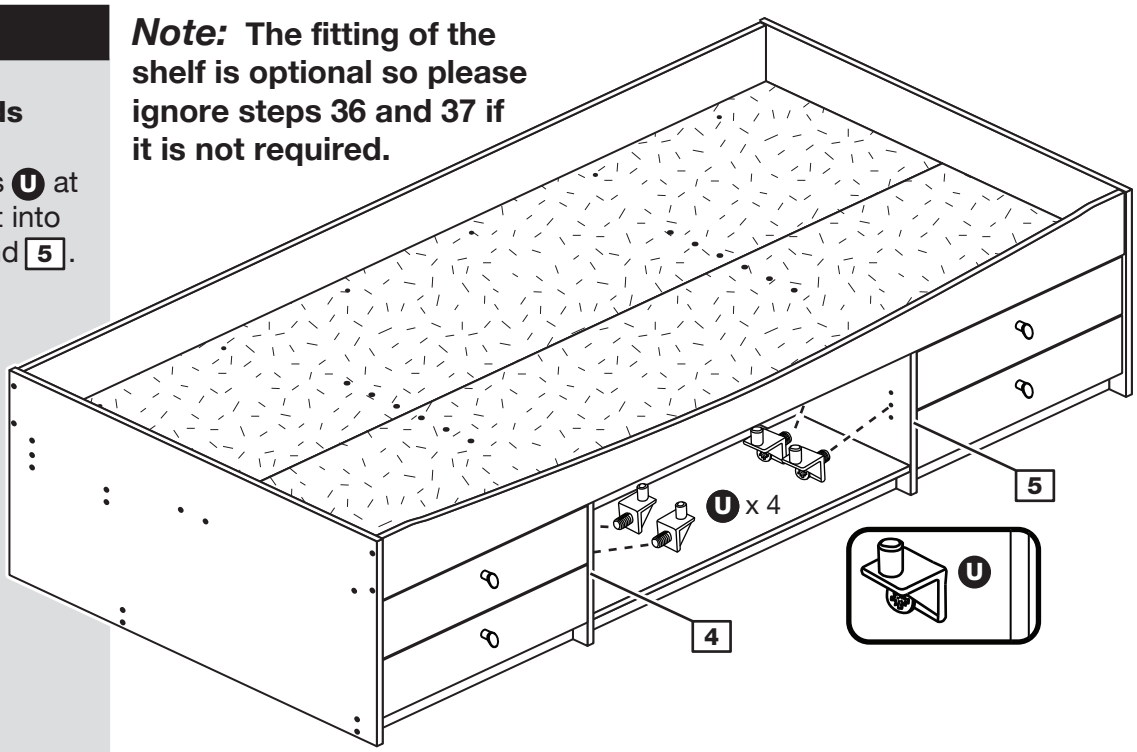

Step 37

Fit the shelf

Lower the shelf 19 down onto the shelf studs U and tighten their screws.

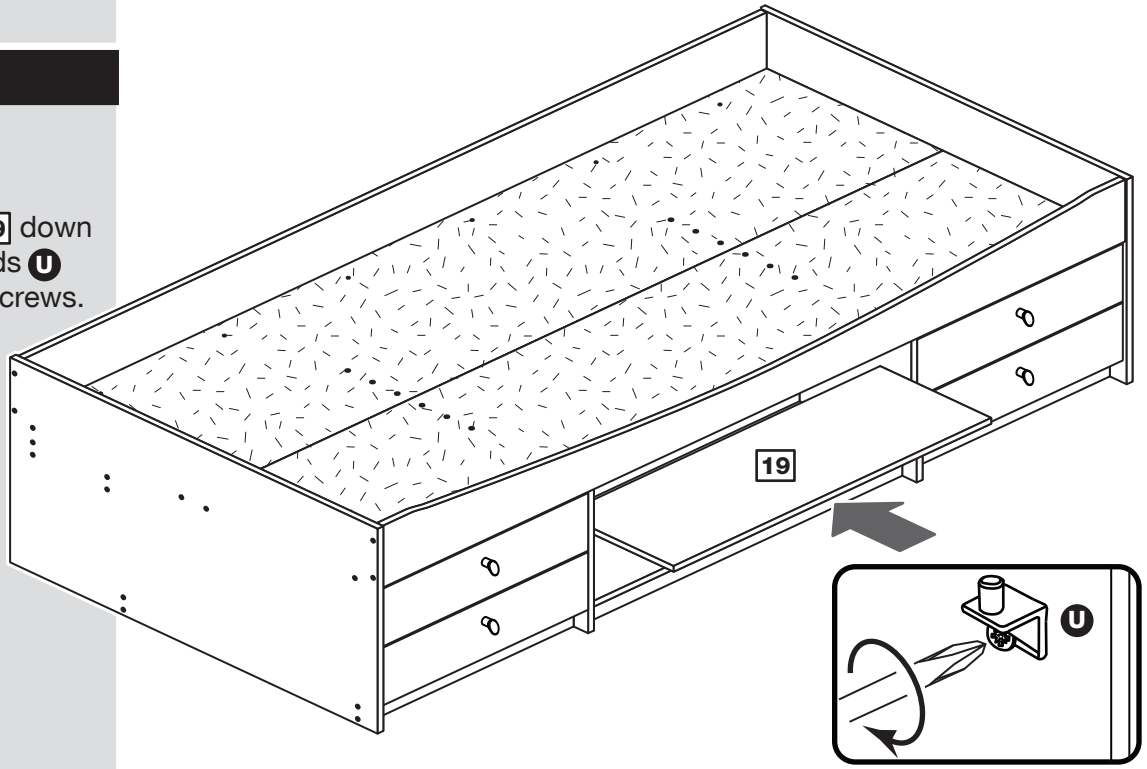

IMPORTANT

On a regular basis please check that the screws and fittings have not become loose as this could present a potential choke hazard.

If you need help or have damaged or missing parts, call the **Customer Helpline: 03456 400800**
and quote the reference numbers on the component pages.
Argos Ltd, 489-499 Avebury Boulevard, Central Milton Keynes, MK9 2NW