General Instructions

Please retain product label and instructions for future reference

06LOG136SG-V1 & 06LOG136DG-V1 (4x4m Corner Cabin - 28mm)
06LOG136SG-V1 - 28mm 4x4m corner cabin with single (glass) glazing.
06LOG136DG-V1 - 28mm 4x4m corner cabin with double (glass) glazing.

BEFORE YOU START PLEASE READ INSTRUCTIONS CAREFULLY

- Check the pack and make sure you have all the parts listed.
- When you are ready to start, make sure you have the right tools at hand (not supplied) including a Phillips screwdriver, Stanley knife, wood saw, step ladder and drill with 2mm bit.
- Ensure there is plenty of space and a clean dry area for assembly.

TIMBER

As with all natural materials, timber can be affected during various weather conditions. For the duration of heavy or extended periods of rain, swelling of the wood panels may occur. Warping of the wood may also occur during excessive dry spells due to an interior moisture loss. Unfortunately, these processes cannot be avoided but can be helped. It is suggested that the outdoor building is sprayed with water during extended periods of warm sunshine and sheltered as much as possible during rain or snow.

Our buildings are pre treated with a water based treatment**; this only helps to protect the product during transit and for upto 3 months against mould. To validate your guarantee and ensure longevity of the product, it is ESSENTIAL the building is treated with a wood preserver within the first three months of assembly and thereafter in accordance with the manufactures recommendations. Care must be taken to ensure the product is placed on a suitable base.

BUILDING A BASE

When thinking about where the building and base is going to be constructed:
Ensure that there will be access to all sides for maintenance work and annual treatment.

Ensure the base is level and is built on firm ground, to prevent distortion. Refer to diagrams for the base dimensions, The base should be slightly smaller than the external measurement of the building, i.e. The cladding should overlap the base, creating a run off for water. It is also recommended that the floor be at least 25mm above the surrounding ground level to avoid flooding.

TYPES OF BASE

- Concrete 75mm laid on top of 75mm hard-core.
- Slabs laid on 50mm of sharp sand.

Whilst all products manufactured are made to the highest standards of Safety and in the case of childrens products independently tested to EN71 level, we cannot accept responsibility for your safety whilst erecting or using this product.

Refer to the instructions pages for you specific product code

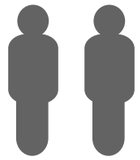

All building's should be erected by two adults



Winter = High Moisture = Expansion
Summer = Low Moisture = Contraction



2mm Drill bit

For ease of assembly, you **MUST** pilot drill all screw holes and ensure all screw heads are countersunk.



CAUTION
Every effort has been made during the manufacturing process to eliminate the prospect of splinters on rough surfaces of the timber. You are strongly advised to wear gloves when working with or handling rough sawn timber.



For ease of assembly use a rubber mallet to fit the log boards. Do **NOT** use a heavy hammer.



Ensure to measure and check before cutting boards.



It is advisable to use a circular saw when cutting roof and floor boards.

For assistance please contact customer care on: 01636 880514

Mercia Garden Products Limited,
Sutton On Trent,
Newark,
Nottinghamshire,
NG23 6QN

www.merciagardenproducts.co.uk

06LOG136SG-V1 & 06LOG136DG-V1

Please retain product label and instructions for future reference

Overall Dimensions:
Width = 4126mm
Depth = 4126mm
Height = 3137mm

Base Dimensions:
Width = 3904mm
Depth = 3904mm

Before assembly please make sure you have a suitable base ready to erect your building

MADE IN GREAT BRITAIN

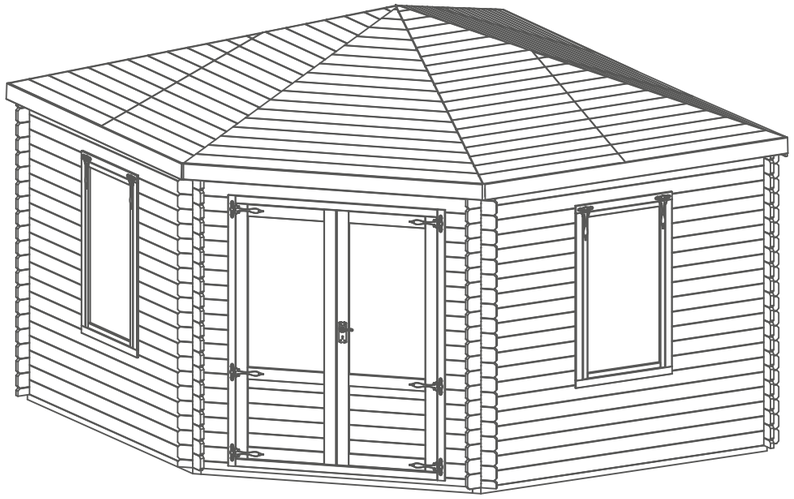

1 2 3

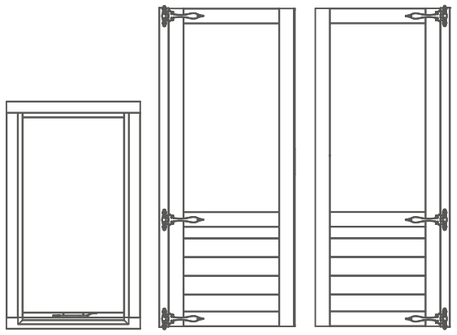

Window QTY 2 **Slave Door** **Master Door**

4 **Starter Board (S1) - 28x66x2377mm**
LB28RT66-2377mm

5 **Log Board (B) - 28x120x404mm QTY 18**
LB28-404mm (Left)

6 **Log Board (B) - 28x120x404mm QTY 18**
LB28-404mm (Right)

7 **Log Board (A) - 28x120x2377mm QTY 2**
LB28-2377mm

8 **Log Board (A) - 28x120x2590mm QTY 8**
LB28-2590mm (Left)

9 **Log Board (B) - 28x120x920mm QTY 24**
LB28-920mm

10 **Log Board (B) - 28x120x920mm QTY 12**
LB28-920mm (Left)

11 **Log Board (AR) - 28x66x2590mm**
LB28RG66-2590mm (Left - tongue added)

12 **Log Board (A) - 28x120x2590mm QTY 8**
LB28-2590mm (Right)

13 **Log Board (B) - 28x120x920mm QTY 12**
LB28-920mm (Right)

14 **Log Board (AR) - 28x66x2590mm**
LB28RG66-2590mm (Right - tongue added)

15 **Starter Board (S1) - 28x66x3811mm**
LB28RT66-3811mm (Left)

16 **Log Board (A) - 28x120x3811mm QTY 20**
LB28-3811mm (Left)

17 **Starter Board (S1) - 28x66x3811mm**
LB28RT66-3811mm (Right)

18 **Log Board (A) - 28x120x3811mm QTY 20**
LB28-3811mm (Right)

19 **Log Board (A) - 28x120x652mm QTY 20**
LB28-652mm

20 **Log Board (AR) - 28x54x652mm**
LB28RG54-652mm

21 **Roof Board Pack 1**
AI-06LOG136SG/DG-V1RBP1

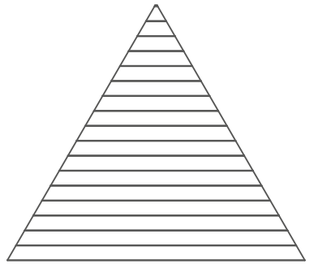

MB16P-2230mm (Angled)
MB16P-2100mm (Angled)
MB16P-1970mm (Angled)
MB16P-1840mm (Angled)
MB16P-1711mm (Angled)
MB16P-1581mm (Angled)
MB16P-1451mm (Angled)
MB16P-1321mm (Angled)
MB16P-1191mm (Angled)
MB16P-1061mm (Angled)
MB16P-932mm (Angled)
MB16P-802mm (Angled)
MB16P-672mm (Angled)
MB16P-542mm (Angled)
MB16P-412mm (Angled)
MB16P-282mm (Angled)
MB16P-152mm (Angled)

22 **Roof Board Pack 2 QTY 2**
AI-06LOG136SG/DG-V1RBP2

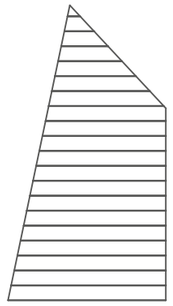

MB16P-1182mm (Angled)
MB16P-1159mm (Angled)
MB16P-1135mm (Angled)
MB16P-1112mm (Angled)
MB16P-1088mm (Angled)
MB16P-1065mm (Angled)
MB16P-1041mm (Angled)
MB16P-1018mm (Angled)
MB16P-994mm (Angled)
MB16P-971mm (Angled)
MB16P-947mm (Angled)
MB16P-921mm (Angled)
MB16P-900mm (Angled)
MB16P-862mm (Angled)
MB16P-743mm (Angled)
MB16P-606mm (Angled)
MB16P-478mm (Angled)
MB16P-351mm (Angled)
MB16P-223mm (Angled)
MB16P-95mm (Angled)

23 **Roof Board Pack 3 QTY 6**
AI-06LOG136SG/DG-V1RBP3

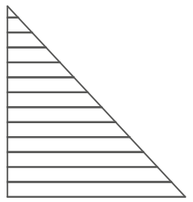

MB16P-1333mm (Angled)
MB16P-1229mm (Angled)
MB16P-1124mm (Angled)
MB16P-1020mm (Angled)
MB16P-915mm (Angled)
MB16P-811mm (Angled)
MB16P-706mm (Angled)
MB16P-602mm (Angled)
MB16P-497mm (Angled)
MB16P-393mm (Angled)
MB16P-289mm (Angled)
MB16P-184mm (Angled)
MB16P-80mm (Angled)

24 **Roof Board Pack 4 QTY 2**
AI-06LOG136SG/DG-V1RBP4

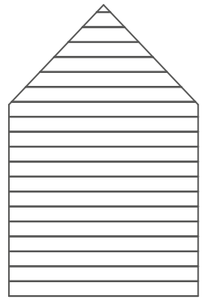

MB16-1418mm QTY 12
MB16P-1418mm (Angled)
MB16P-1378mm (Angled)
MB16P-1166mm (Angled)
MB16P-953mm (Angled)
MB16P-740mm (Angled)
MB16P-528mm (Angled)
MB16P-315mm (Angled)
MB16P-103mm (Angled)

25 **Floor Board Pack**
AI-06LOG136SG/DG-V1FBP

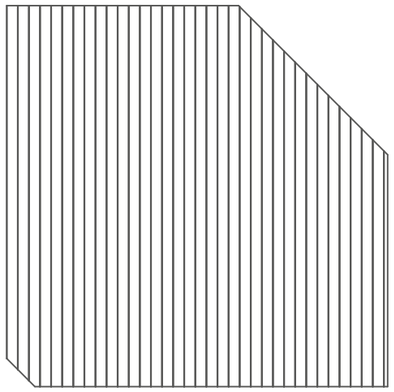

MB16P-3683mm (Angled -tongue side)
MB16P-3795mm (Angled - tongue side)
MB16P-3846mm (Angled - tongue side)
MB16-3846mm QTY 17
MB16P-3846mm (Angled - groove side)
MB16P-3835mm (Angled - groove side)
MB16P-3723mm (Angled - groove side)
MB16P-3611mm (Angled - groove side)
MB16P-3499mm (Angled - groove side)
MB16P-3387mm (Angled - groove side)
MB16P-3275mm (Angled - groove side)
MB16P-3163mm (Angled - groove side)
MB16P-3051mm (Angled - groove side)
MB16P-2939mm (Angled - groove side)
MB16P-2827mm (Angled - groove side)
MB16P-2715mm (Angled - groove side)
MB16P-2603mm (Angled - groove side)
MB16P-2491mm (Angled - groove side)
MB16P-2379mm (Angled - groove side)

26 **Bearer - 44x44x3814mm QTY 8**
F4444-3814mm (Pressure Treated)

27 **Bearer - 44x44x3860mm**
F4444-3860mm (Pressure Treated)

28 **Bearer - 44x44x3814mm**
F4444-3834mm (Angled - Pressure Treated)

29 **Bearer - 44x44x3514mm**
F4444-3534mm (Angled - Pressure Treated)

30 **Bearer - 44x44x3214mm**
F4444-3234mm (Angled - Pressure Treated)

31 **Bearer - 44x44x2916mm**
F4444-2936mm (Angled - Pressure Treated)

32 **Bearer - 44x44x2637mm**
F4444-2657mm (Angled - Pressure Treated)

33 **Bearer - 44x44x2426mm QTY 2**
F4444-2446mm (Angled - Pressure Treated)

34 **Bearer - 44x44x2114mm**
F4444-2154mm (Angled - Pressure Treated)

35 **Front Purlin - 1847mm**
AI-06LOG136SG/DG-V1FCP

36 **Side Purlin - 2697mm QTY 2**
AI-06LOG136SG/DG-V1MSP

37 **Centre Left Purlin - 1448mm QTY 3**
AI-06LOG136SG/DG-V1CPL

38 **Centre Right Purlin - 1448mm QTY 3**
AI-06LOG136SG/DG-V1CR

39 **Rear Purlin - 45x70x2967mm**
F4570-3007mm (Angled)

40 **Front Left Purlin - 45x70x2226mm**
F4570-2266mm (Angled)

41 **Front Right Purlin - 45x70x2226mm**
F4570-2266mm (Angled)

42 **Front Right Block - 45x70x185mm**
F4570-205mm (Angled)

43 **Rear Block - 45x70x185mm**
F4570-205mm (Angled)

44 **Front Left Block - 45x70x185mm**
F4570-205mm (Angled)

45 **Centre Block - 45x120x143mm**
F44120-143mm (Angled)

46 **Door Strip - 16x60x1880mm**
F1660-1880mm (Angled)

47 **Rear Fascia - 16x120x4094mm**
S16120-4094mm

48 **Side Fascia - 16x120x2534mm QTY 2**
S16120-2534mm

49 **Front Fascia - 16x120x2500mm**
S16120-2262mm

50 **Top Block Door Left - 28x80x1016mm**
LB28RG80-1016mm (Left - Angled)

51 **Top Block Door Right - 28x80x1016mm**
LB28RG80-1016mm (Right - Angled)

52 **Top Block Window Left - 28x80x1107mm**
LB28RG80-1107mm (Left - Angled)

53 **Top Block Window Right - 28x80x1107mm**
LB28RG80-1107mm (Right - Angled)

54 **Top Block Rear Right - 28x80x1188mm QTY 3**
LB28RG80-1188mm (Right - Angled)

55 **Top Block Rear Left - 28x80x1188mm QTY 3**
LB28RG80-1188mm (Left - Angled)

56 **Top Block Rear Centre - 28x80x1377mm QTY 2**
LB28RG80-1377mm

57 **Storm Brace - 27x44x2100mm QTY 14**
F2744-2100mm

58 **Skirting - 28x28x2400mm QTY 15**
FS2828-2400mm

59 **Interior Roof Trim - 27x44x2400mm QTY 15**
F2744-2400mm (Bevelled)

60 **Door Frame Top & Bottom - 55x69x1505mm QTY 2**
WF2744-1505mm (28mm)

61 **Mortice Lock**

62 **Key Plate**

63 **Handles (*Pair*)**

64 **Tower Bolt QTY 2**

65 **Felt**

66 **Casement Stay QTY 2**

67 **Corner Top Block**
AI-06LOG136-V1BACKB

Nail Bag

80mm Bolt Set x25

40mm Screw x1200

120mm Screw x19

30mm Screw x25

Felt Tacks x175

90mm Screw x100

70mm Screw x200

Pre-assembly

Please note:

Each board interlocks at either end in a staggered pattern.

Before securing ensure that the boards are fitted properly in their respective tongue's and groove's.

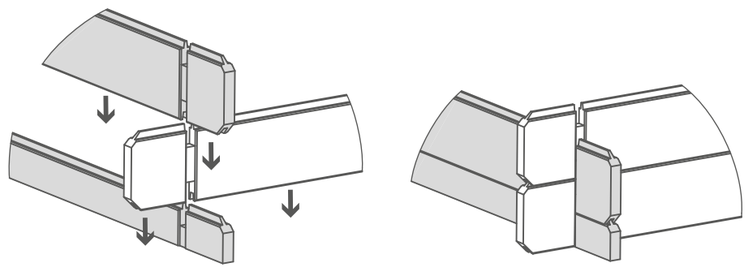

Step 1: Door Frame Fit

Arrange the door framing onto a firm and level surface. Secure the top and bottom frames (***No. 60***) to the uprights (attached to each door). Fix into place using 1x70mm screw per corner, ensuring the screws do ***NOT*** protrude into the channel either side of the doors.

Please note: *This image is for illustrative purposes and may differ from your choice in product (**regarding hinges**). Nevertheless the process of fixing the frames is the same.*

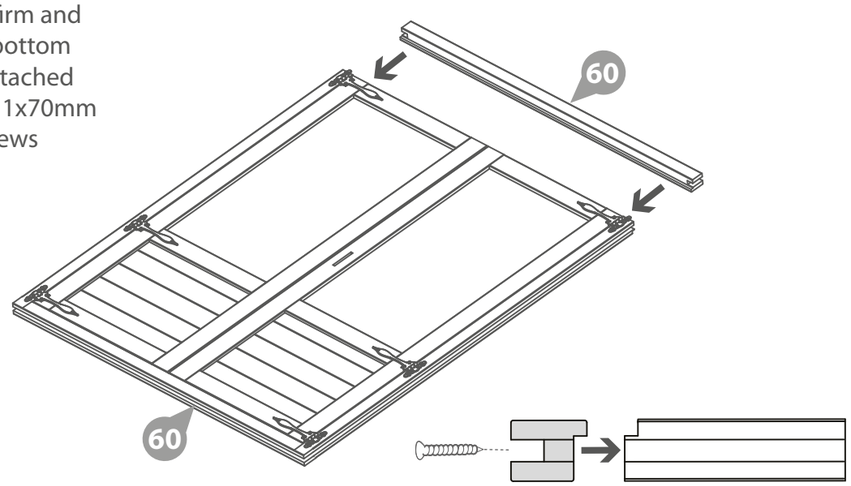

Ensure the top & bottom rails sit inbetween the upright framing attached to the doors.

4x70mm Screws



Step 2

a Fit the mortice lock (***No. 61***) into the recess in the master door (***No. 3***) and secure using the screws provided. Attach the key plate (***No. 62***) to the slave door (***No. 2***) with the screws provided.

b Fit the door handles (***No. 63***) and connect with the metalbar to the mortice lock using 8x30mm screws. Ensure the lock mechanism closes correctly. If not, remove the lock and turn the catch around using the small grub screw.

Please note: *This image is for illustrative purposes and may differ from your choice in product (**regarding ironmongery**). Nevertheless the process of fixing the frames is the same.*

12x30mm Screws



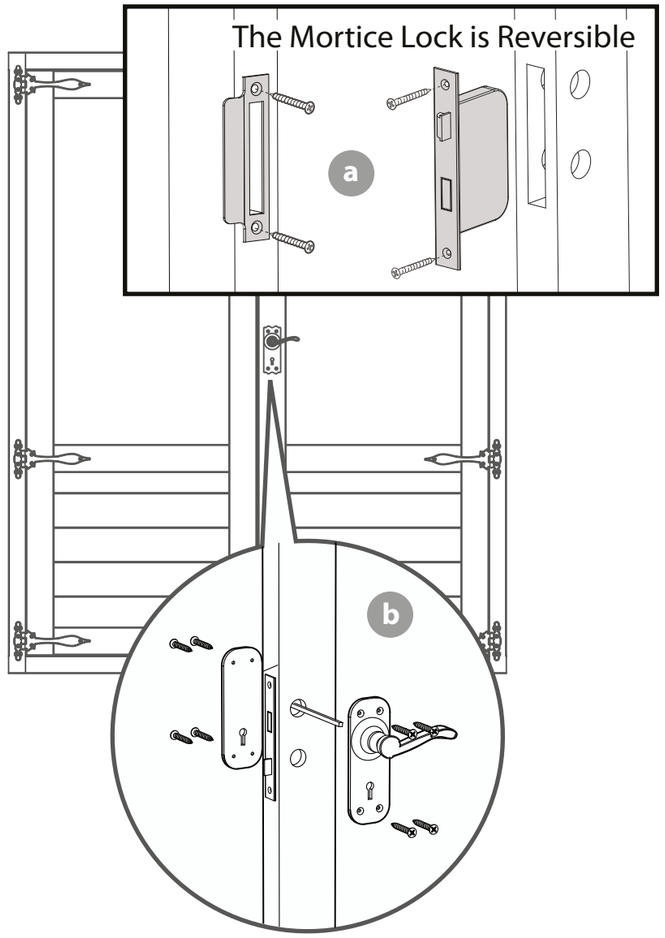

Step 3

Attatch the door strip (***No. 46***) to the back of slave door using 4x40mm screws as shown in the illustration.

Once fixed secure the tower bolts (***No. 64***) to the top and bottom of the strip using the screws provided.

These tower bolts help to keep your doors straight during high and low levels of moisture content in the air.

4x40mm Screws

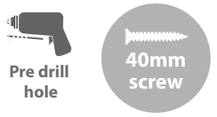

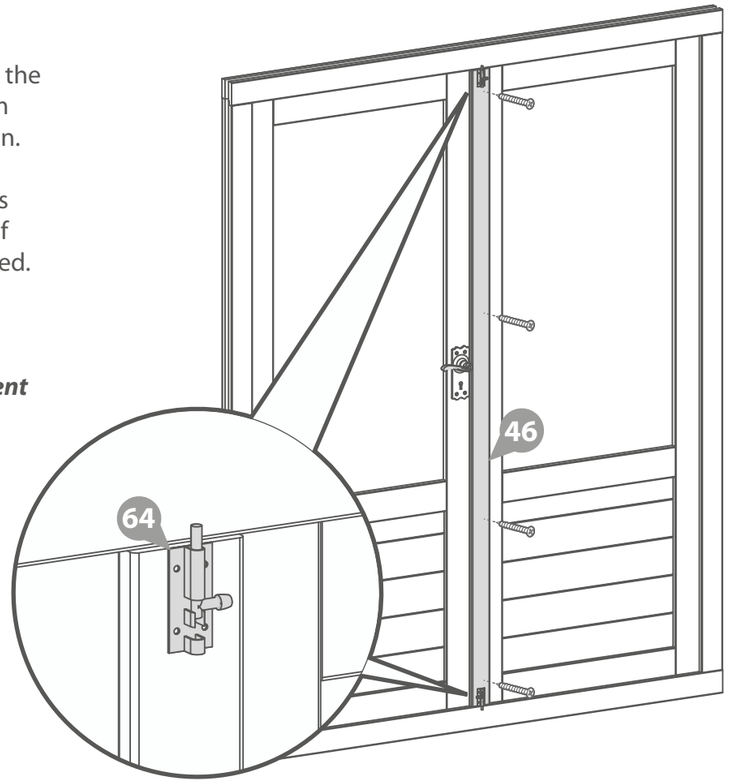

Step 4

Fix the casement stay (***No. 66***) onto the window (***No. 1***) and the casement stay pins to the window cill using 6x30mm screws per casement stay.

Ensure the casement stay is centralised on the window.

12x30mm Screws



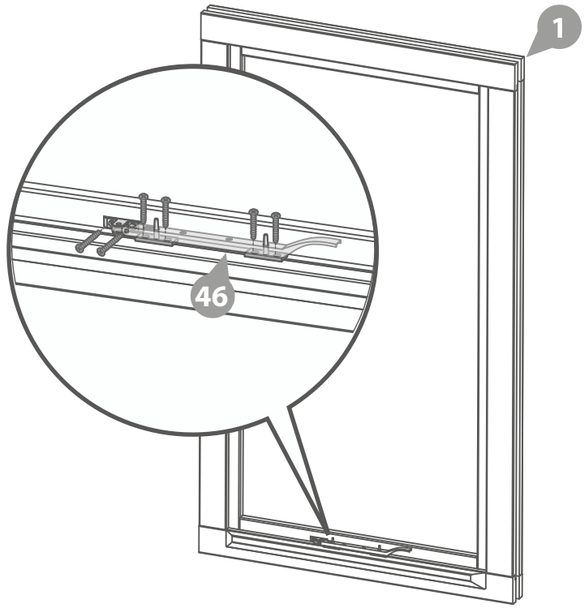

Step 5

Lay the bearers (***No's. 26, 27, 33 & 34***) onto a firm and level surface (free from areas where standing water can collect) as shown in the illustration.

Fix the framing together at each corner using 10x70mm screws, ensuring the framing is flush.

10x70mm Screws

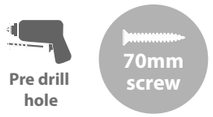

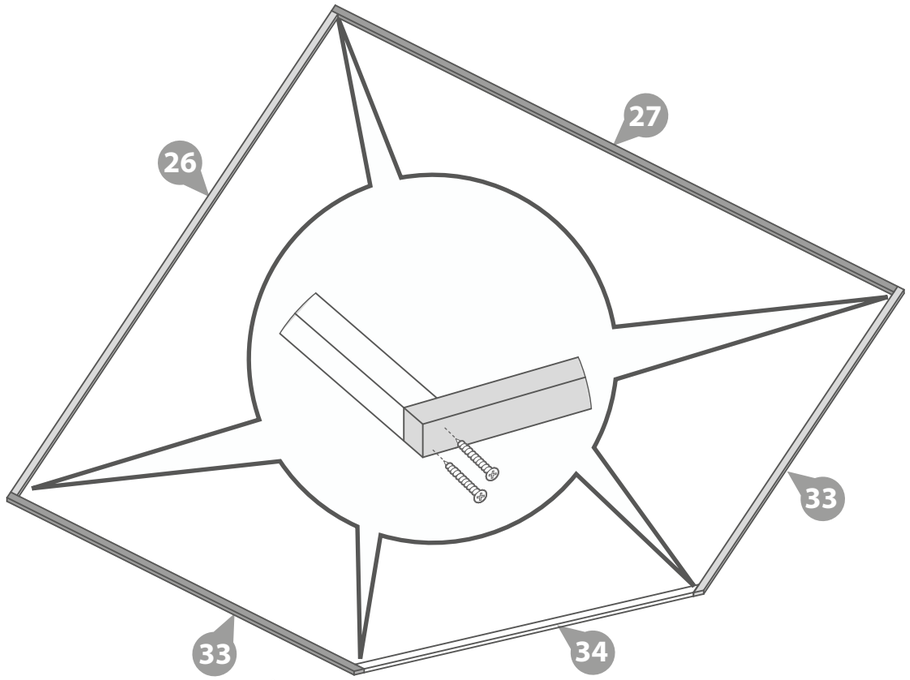

Step 6

Following the same method outlined in **Step 5** arrange the bearers (***No's. 26, 28, 29, 30, 31 & 32***) onto a firm and level surface (free from areas where standing water can collect) as shown in the illustration.

Ensure there is an equal amount of space between each bearer.

Secure each frame into place using 4x70mm screws, making sure the framing stays level.

48x70mm Screws



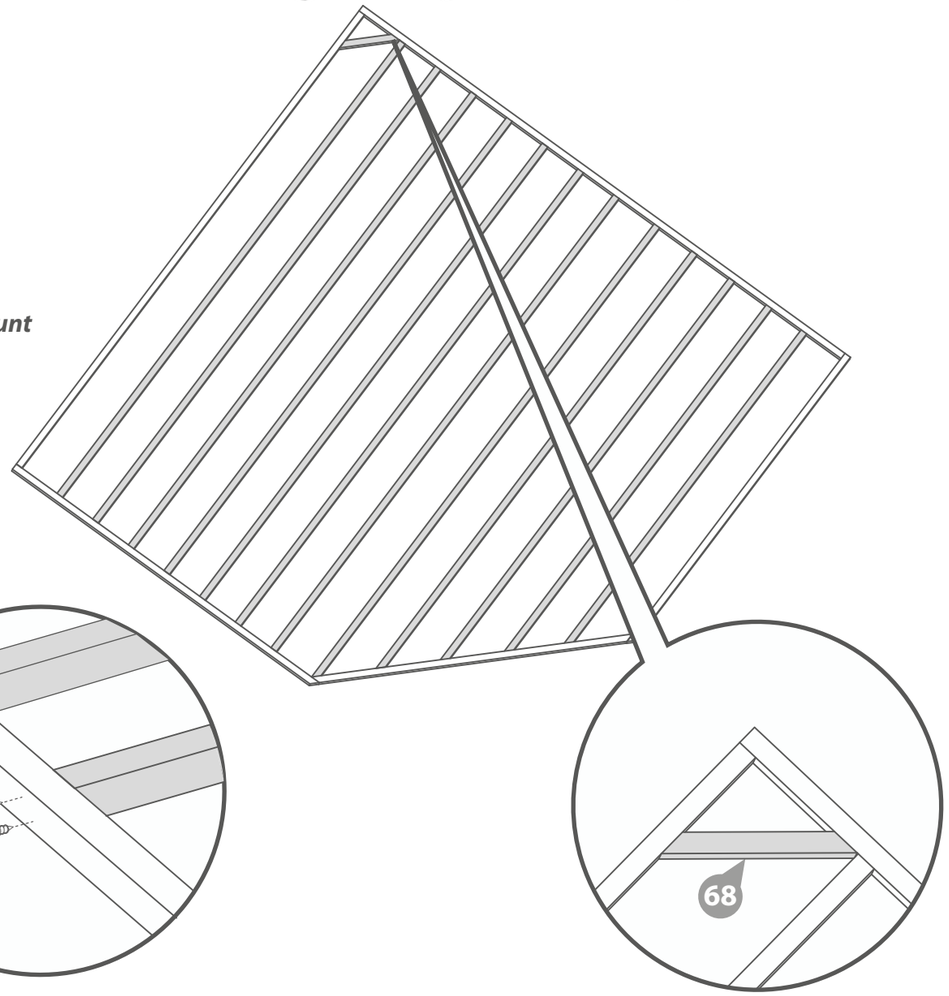

Step 7 *(See Pre-Assembly)*

Place the starter boards (***No's. 4, 8, 12, 15, 16 & 19***) on to assembled base frame along the longest sides.

Ensure the notches at either end of each board are flush and level with the ends of the frame.

Fix each of the starter boards to the frame by screwing through the notch into the frame as shown in the illustration.

4x70mm Screws

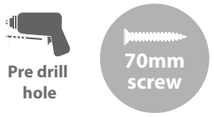

IMPORTANT: ***It is imperative that you pre-drill before fixing screws.***

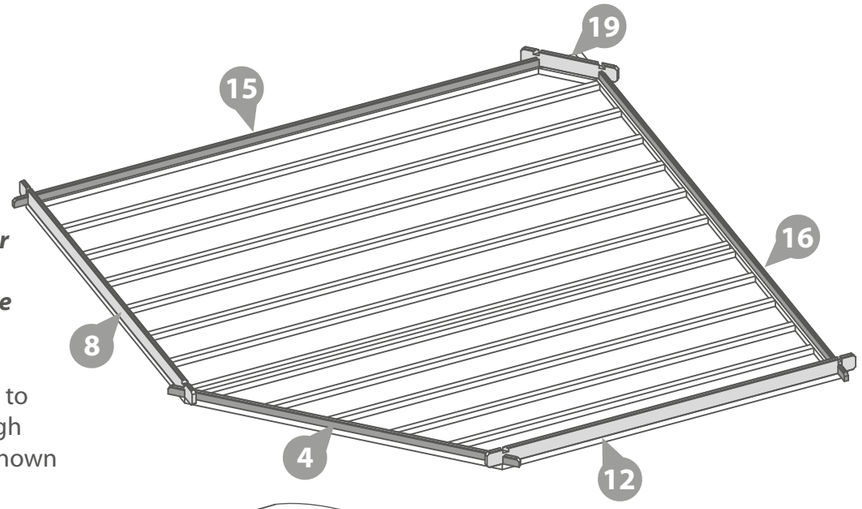

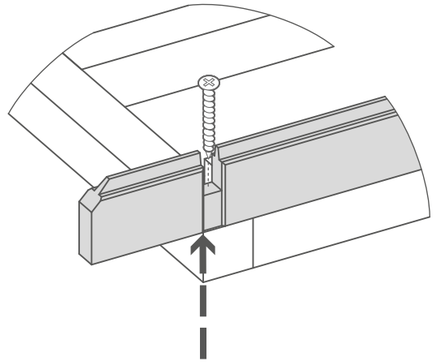

Step 8 *(See Pre-Assembly)*

IMPORTANT: ***It is imperative that you pre-drill before fixing screws.***

Following the same method outlined in *Pre-Assembly*, lay the first 6 boards (***No's. 5, 6, 8, 12, 16, 18 & 19***) onto the starter boards to create your first level.

Ensure that the boards are level and flush with each other as you lay each one.

Fix every third board to the one below by screwing through the notch as shown in the illustration using 1x70mm screw per side.

****Ensure to stagger the screws so as not to collide with the previous screw.***

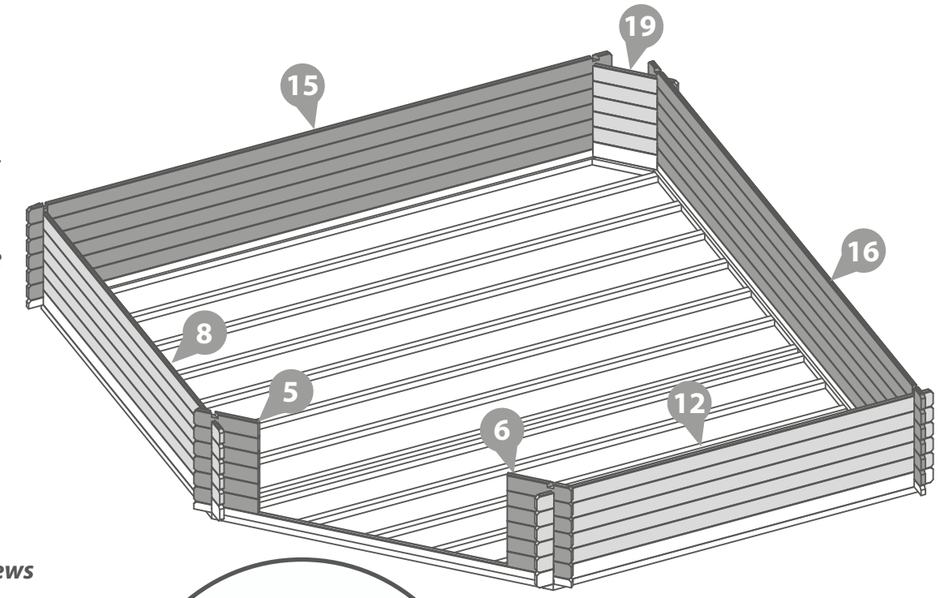

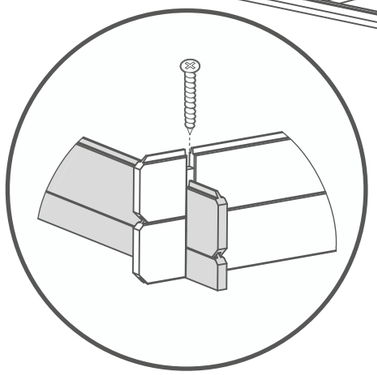

16x70mm Screws

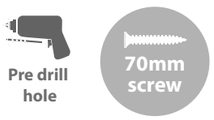

Step 9

Once you have laid 6 log boards (*off of the starter*) up the door section, slide the assembled door frame assembly over the boards resting the frame on top of the starter board.

****Please note:*** *This image is for illustrative purposes and may differ from your choice in product (**regarding door position**). Nevertheless the process of fitting the door frame is the same.*

*****Please Note:*** *The short boards at the front of the building (either side of the door and window opening's) can be placed either side depending on your needs.*

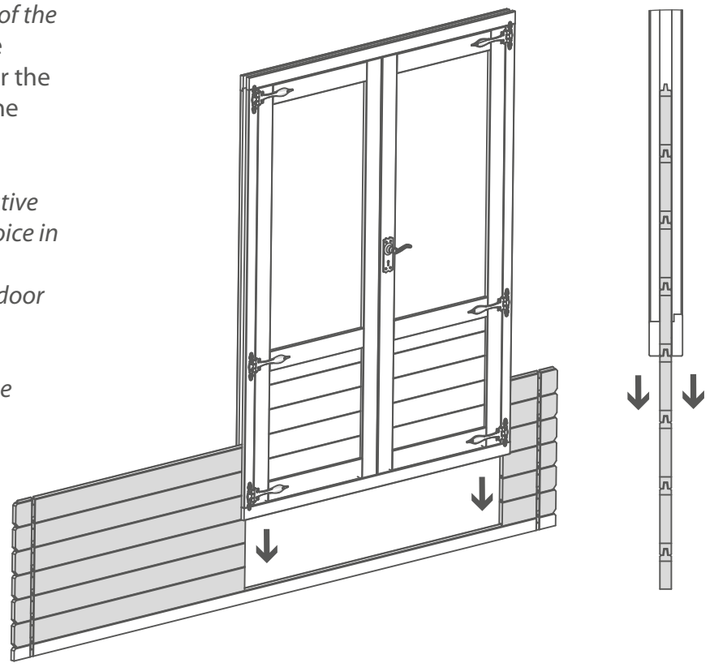

Step 10 *(See Pre-Assembly)*

IMPORTANT: ***It is imperative that you pre-drill before fixing screws.***

Following the same method outlined in *Pre-Assembly*, lay the next 6 boards (***No's. 5, 6, 9, 10, 13, 16, 18 & 19***) onto the assembly to create your second level.

Ensure that the boards are level and flush with each other as you lay each one.

Fix every third board to the one below by screwing through the notch as shown in the illustration using 1x70mm screw per side (*as outlined in Step 8*).

****Ensure to stagger the screws so as not to collide with the previous screw.***

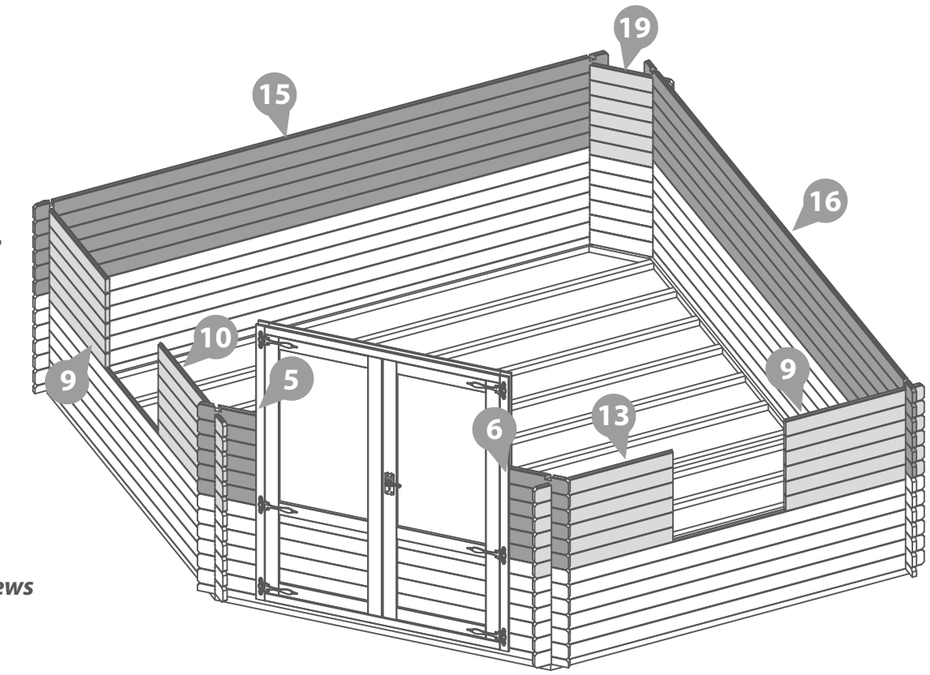

20x70mm Screws

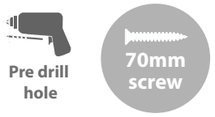

Step 11: Window Frame Fit

Once you have laid the second level of boards onto the assembly slide the window(*s*) between the smaller boards and rest on to the longer board.

****Ensure the boards are level with each end.***

****Please note:*** *This image is for illustrative purposes and may differ from your choice in product (**regarding window position**). Nevertheless the process of fitting the window is the same.*

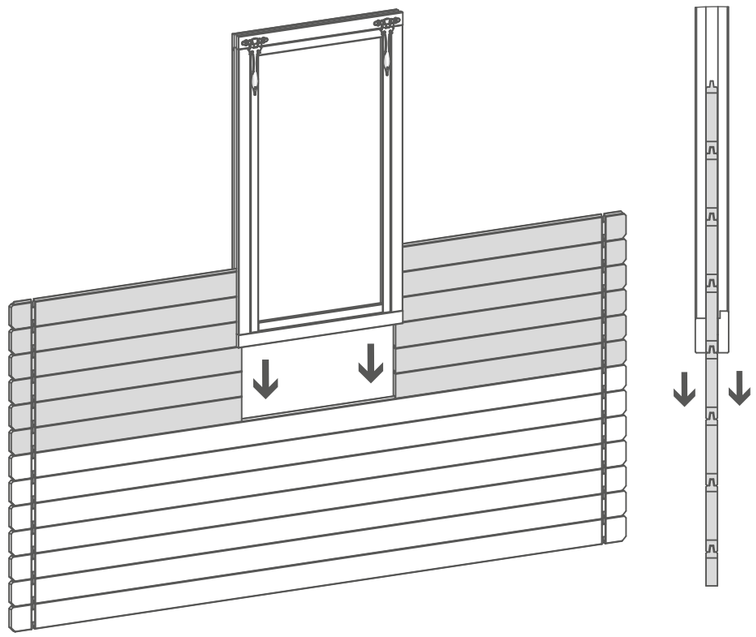

Step 12 *(See Pre-Assembly)*

IMPORTANT: ***It is imperative that you pre-drill before fixing screws.***

Following the same method outlined in *Pre-Assembly*, lay the remaining boards (***No's. 5, 6, 9, 10, 13, 16, 18 & 19***) onto the assembly to bring the board level to the top of the window and door frames.

****Ensure that the boards are level and flush with each other as you lay each one.***

Fix every third board to the one below by screwing through the notch as shown in the illustration using 1x70mm screw per side (*as outlined in Step 7*).

*****Ensure to stagger the screws so as not to collide with the previous screw.***

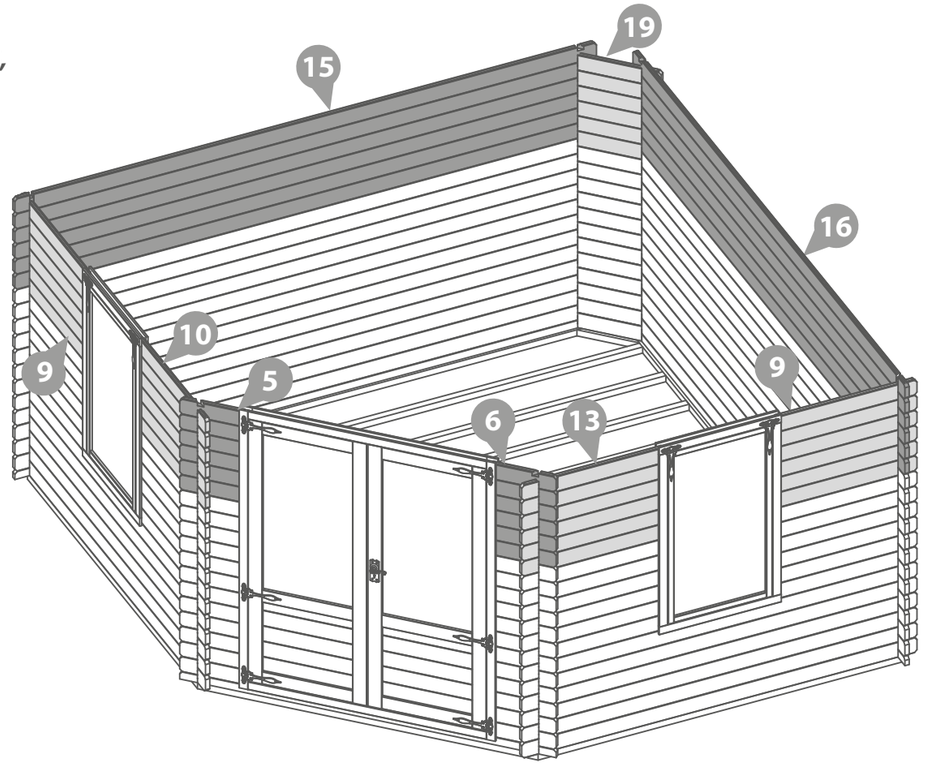

20x70mm Screws

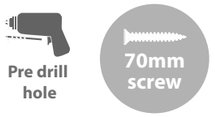

Step 13 *(See Pre-Assembly)*

Following the same method outlined in *Pre-Assembly*, lay the remaining boards (***No's. 7, 8, 12, 16, 18 & 19***) onto the assembly to bring the board level x2 boards above the door and window frames.

****Ensure that the boards are level and flush with each other as you lay each one.***

Fix every third board to the one below by screwing through the notch as shown in the illustration using 1x70mm screw per side (*as outlined in Step 7*).

*****Ensure to stagger the screws so as not to collide with the previous screw.***

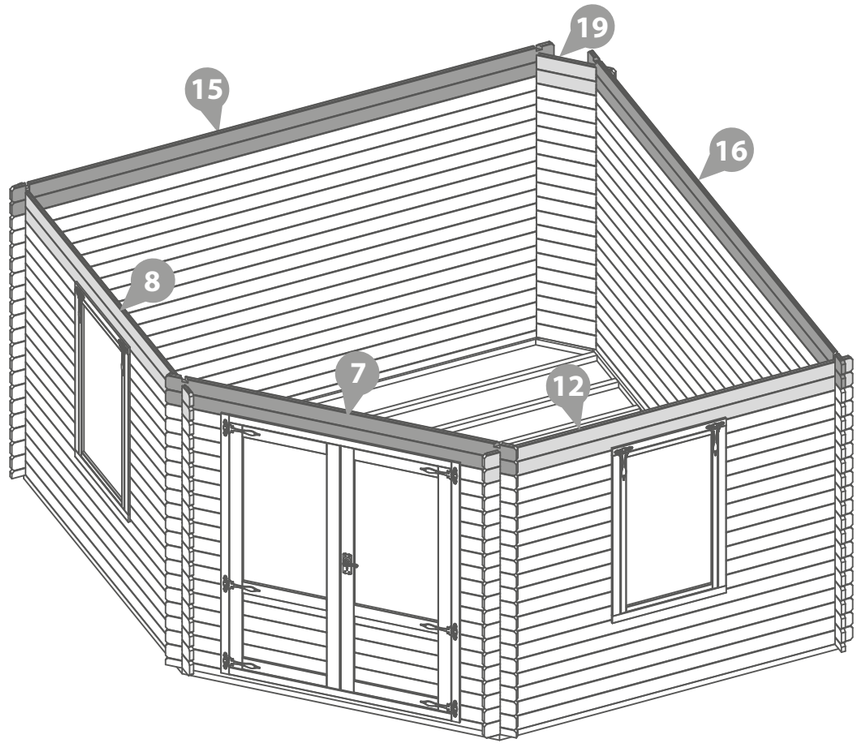

IMPORTANT: ***It is imperative that you pre-drill before fixing screws.***

20x70mm Screws

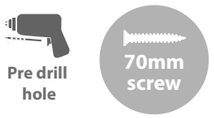

Step 14 *(See Pre-Assembly)*

Following the same method outlined in *Pre-Assembly*, lay the last three boards (***No's. 11, 14 19 & 67***) onto the building, fixing into position by screwing through the notches as shown in the illustration.

20x70mm Screws

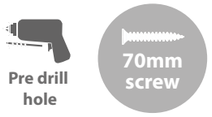

IMPORTANT: ***It is imperative that you pre-drill before fixing screws.***

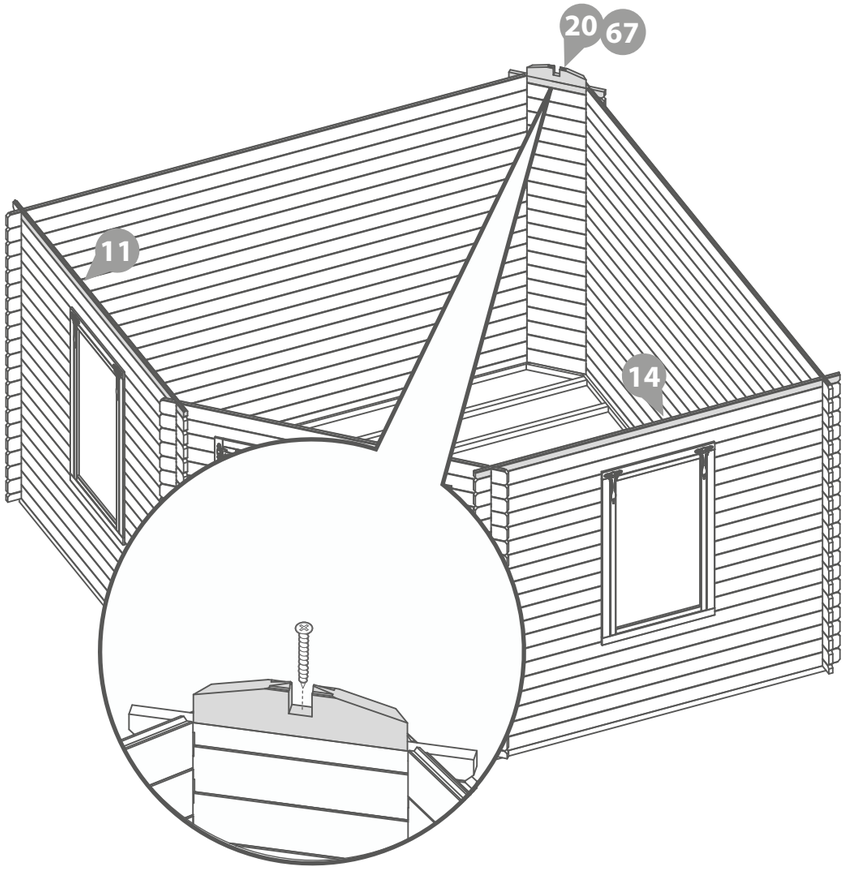

Step 15 *(Spider [**roof structure**] assembly part 1)*

To begin building the roof structure fix the two side purlins (***No. 36***) & the rear purlin (***No. 39***) onto the centre block (***No. 45***) using 2x70mm screws per purlin.

6x90mm Screws

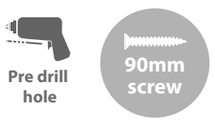

IMPORTANT: ***It is imperative that you pre-drill before fixing screws.***

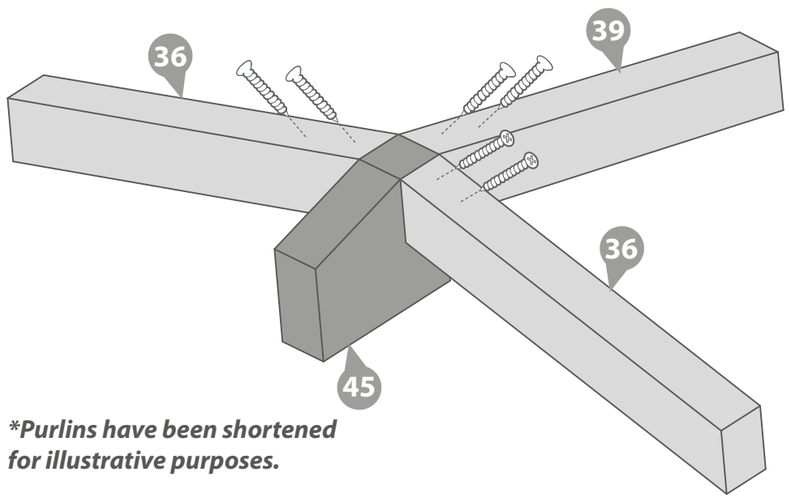

Purlins have been shortened for illustrative purposes.

Step 16 *(Spider [**roof structure**] assembly part 2)*

Attach the front purlin left (***No. 40***) and right (***No. 41***) to the spider assembly using 3x70mm screws per purlin.

Ensure the angled section follows the spider block and meets the the long purlins on either side.

6x90mm Screws

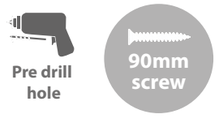

IMPORTANT: ***It is imperative that you pre-drill before fixing screws.***

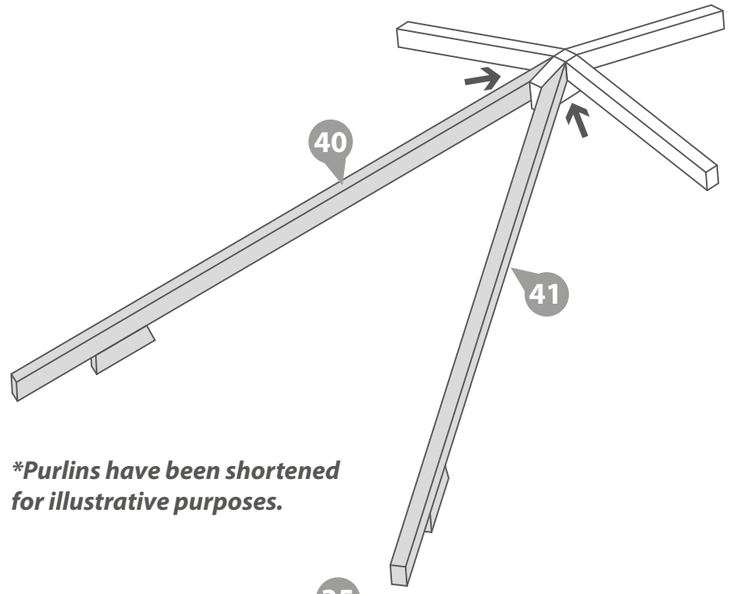

Purlins have been shortened for illustrative purposes.

Step 17 *(Spider [**roof structure**] assembly part 3)*

Following the same method outlined in **Step 15** secure the centre purlin as well as the right & left purlins (***No's. 35, 37 & 38***) to the long pulins and centre block as shown in the illustration using 2x70mm screws purlin.

Measure along the top of each long pulin 1946mm, mark the position with a pencil and match the top point of each left & right section to the pencil mark as shown in the illustration.

14x90mm Screws



IMPORTANT: ***It is imperative that you pre-drill before fixing screws.***

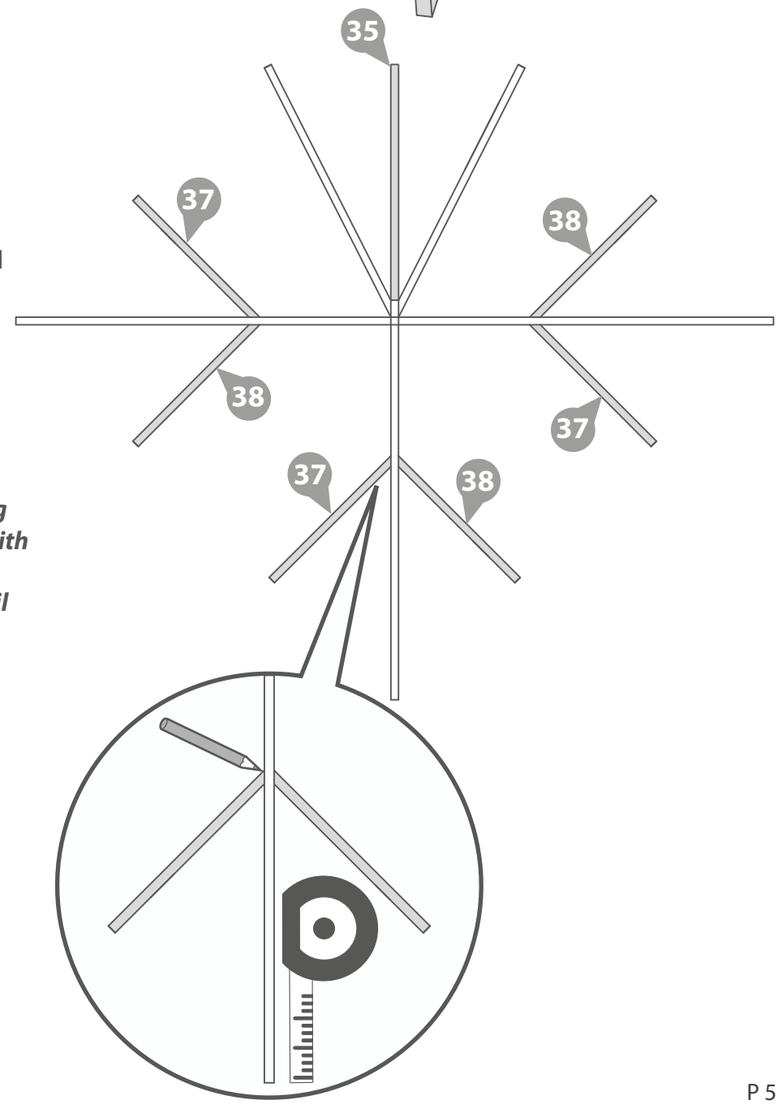

Step 18

Place the assembled spider onto the building, making sure the attached blocks sit inside the assembly.

Some adjustment may be required to ensure the spider [*roof structure*] rests corectly. Once in position fix to the building using 1x120mm screw per purlin.

HINT: Use a fascia from the fixing kit to make certain that the purlins line up and are square.

12x120mm Screws



IMPORTANT: ***It is imperative that you pre-drill before fixing screws.***

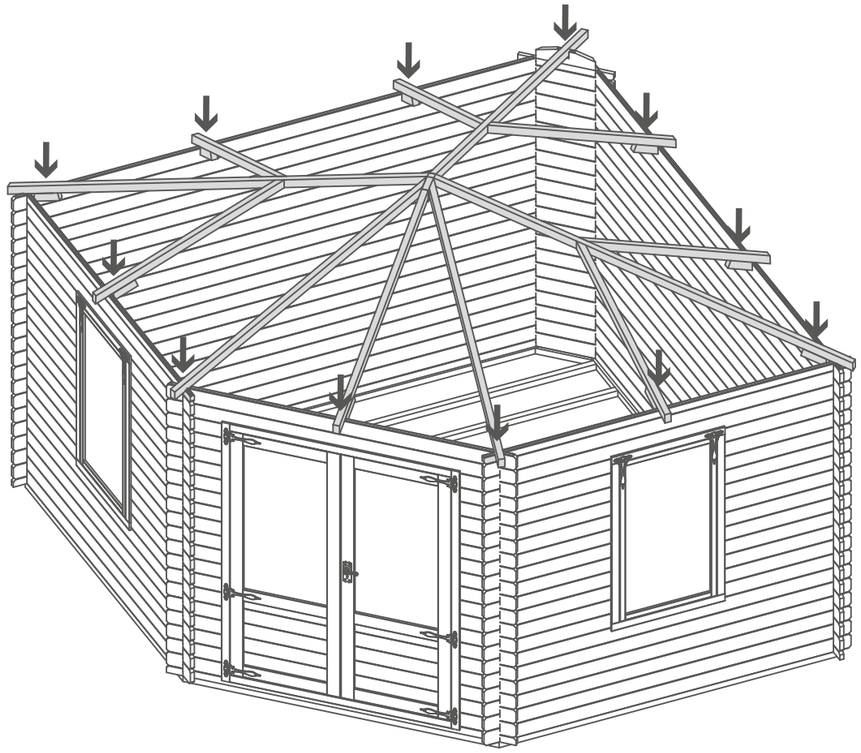

Step 19

Once the spider [*roof structure*] is in position attach the remaining roof blocks (***No's. 42, 43 & 44***) to front and rear purlins using 2x120mm screws per block.

6x120mm Screws

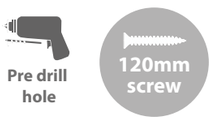

IMPORTANT: ***It is imperative that you pre-drill before fixing screws.***

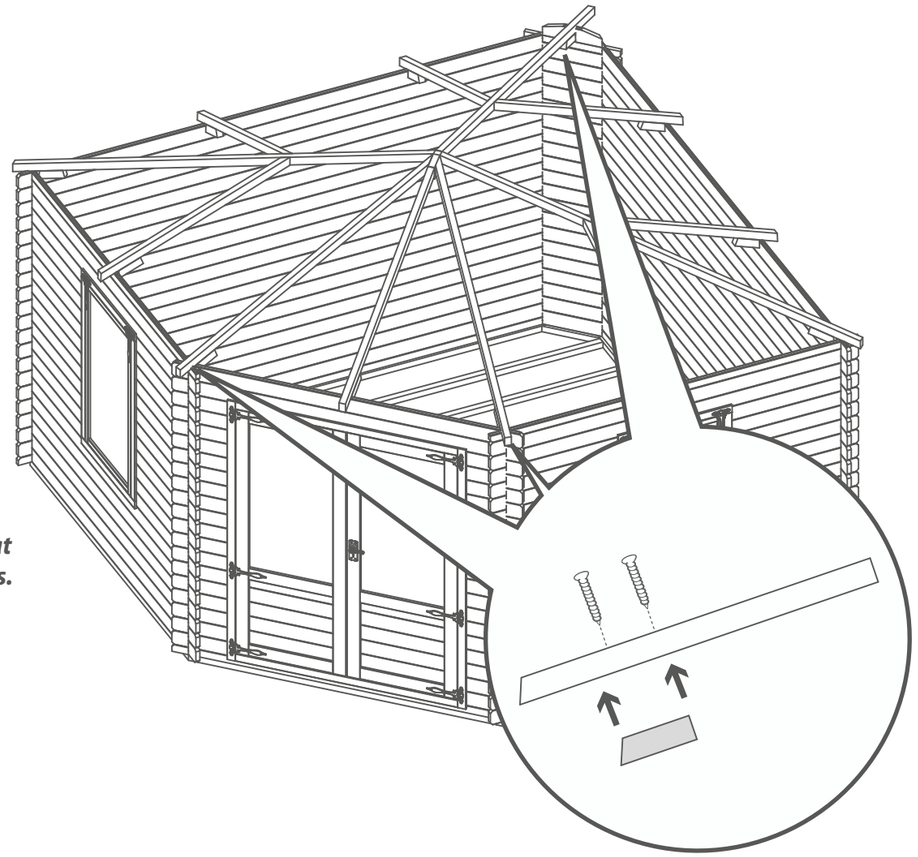

Step 20

Place the top blocks (***No's. 50, 51, 52, 53, 54, 55 & 56***) around the building, locating each block in-between the spider.

Secure each top block into position using 2x70mm screws, ensure to stagger the screws to avoid colliding.

Please note: wood is a natural product and is susceptable to movement ie; expansion and contraction***. Because of this some adjustment may be required for an accurate fit.***

14x70mm Screws

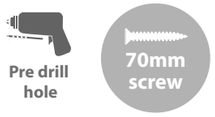

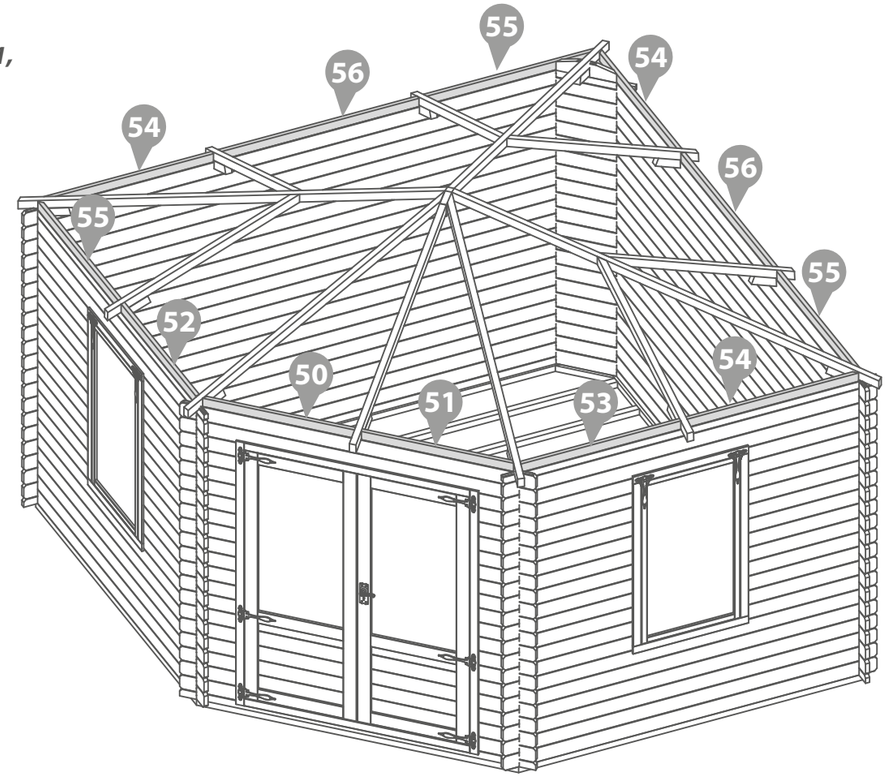

Step 21

Start arranging the roof board packs (***No's. 21, 22, 23 & 24***) onto the roof assembly, working around the structure building each layer of roof boards one by one.

HINT:** ***keep the roof board packs seperate so as not to mix up the positions.

****Please note: wood is a natural product and is susceptible to movement ie;** *expansion & contraction*. **Because of this some adjustment may be required for an accurate fit.***

Once you are happy with the fit of the roof boards fix the bottom layer into place using 2x40mm screws per board ensuring to fix through the roof board into the purlin below.

22x40mm Screws



IMPORTANT: ***It is imperative that you pre-drill before fixing screws.***

Please check the longest measurment of each board before beginning the roofing process.

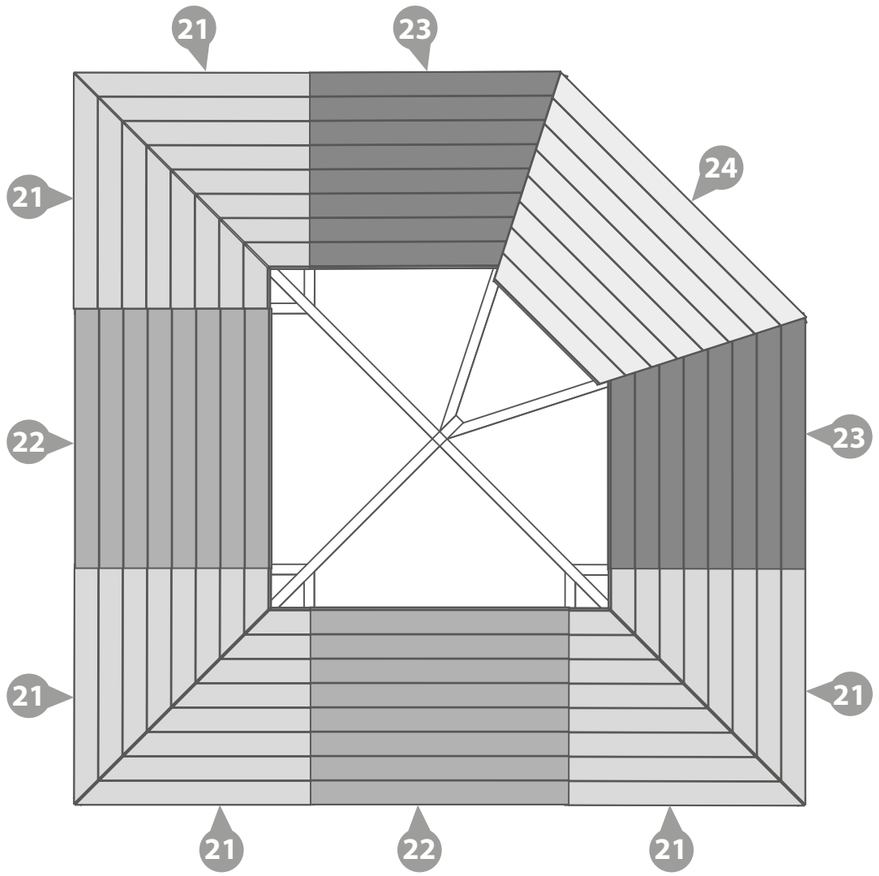

Step 22

Following the same method set out in **Step 21** continue adding the remaining roof boards onto the assembly, building each layer one by one.

HINT:** ***keep the roof board packs seperate so as not to mix up the positions.

****Please note: wood is a natural product and is susceptible to movement ie;** *expansion & contraction*. **Because of this some adjustment may be required for an accurate fit.***

Once you are happy with the fit of the roof boards fix each roof board into place using 2x40mm screws ensuring to fix through the roof board into the purlin below.

268x40mm Screws



IMPORTANT: ***It is imperative that you pre-drill before fixing screws.***

Please check the longest measurment of each board before beginning the roofing process.

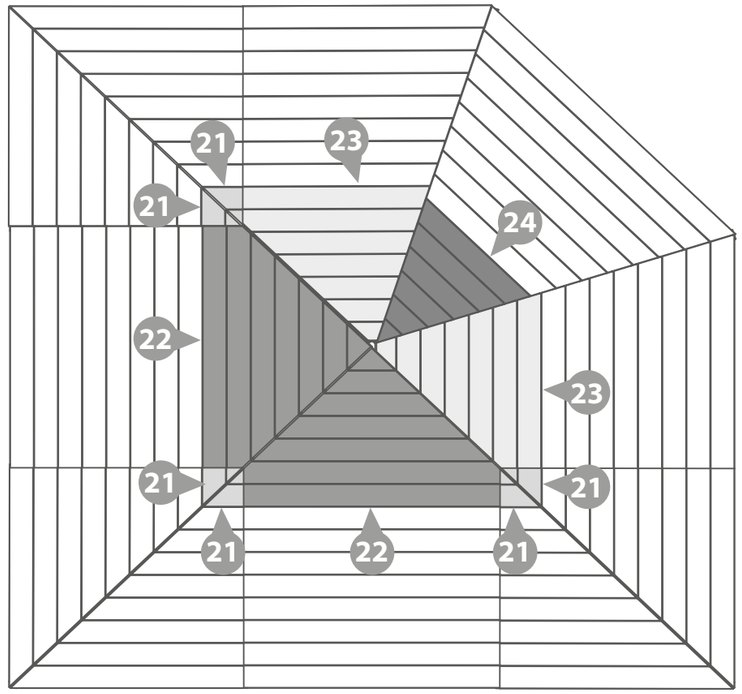

Step 23

IMPORTANT: ***It is imperative that you pre-drill before fixing screws.***

Place the floor boards from the floor board pack (***No. 25***) inside the building starting flush to one side. Continue adding the floor boards (*internally*) making sure to interlock each individual board.

Do NOT secure the boards until the last board has been measured and cut.

With the last board measure the gap between the bottom of the tongue (***on the last board placed***) and the log board.

Using a straight edge mark out the measurement onto the last floor board and cut along the length removing the excess.

****Please note:*** *Mark the final board 2mm under the measurement; This will allow the timber to expand and contract correctly.*

Once all the floor boards are in position secure each board into position using 40mm screws.

*****Please Note:*** *Ensure to screw through eachof the floor boards into the floor bearers.*

504x40mm Screws

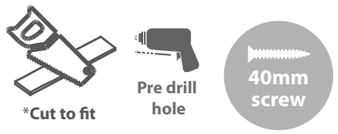

Please check the longest measurment of each board before beginning the flooring process.

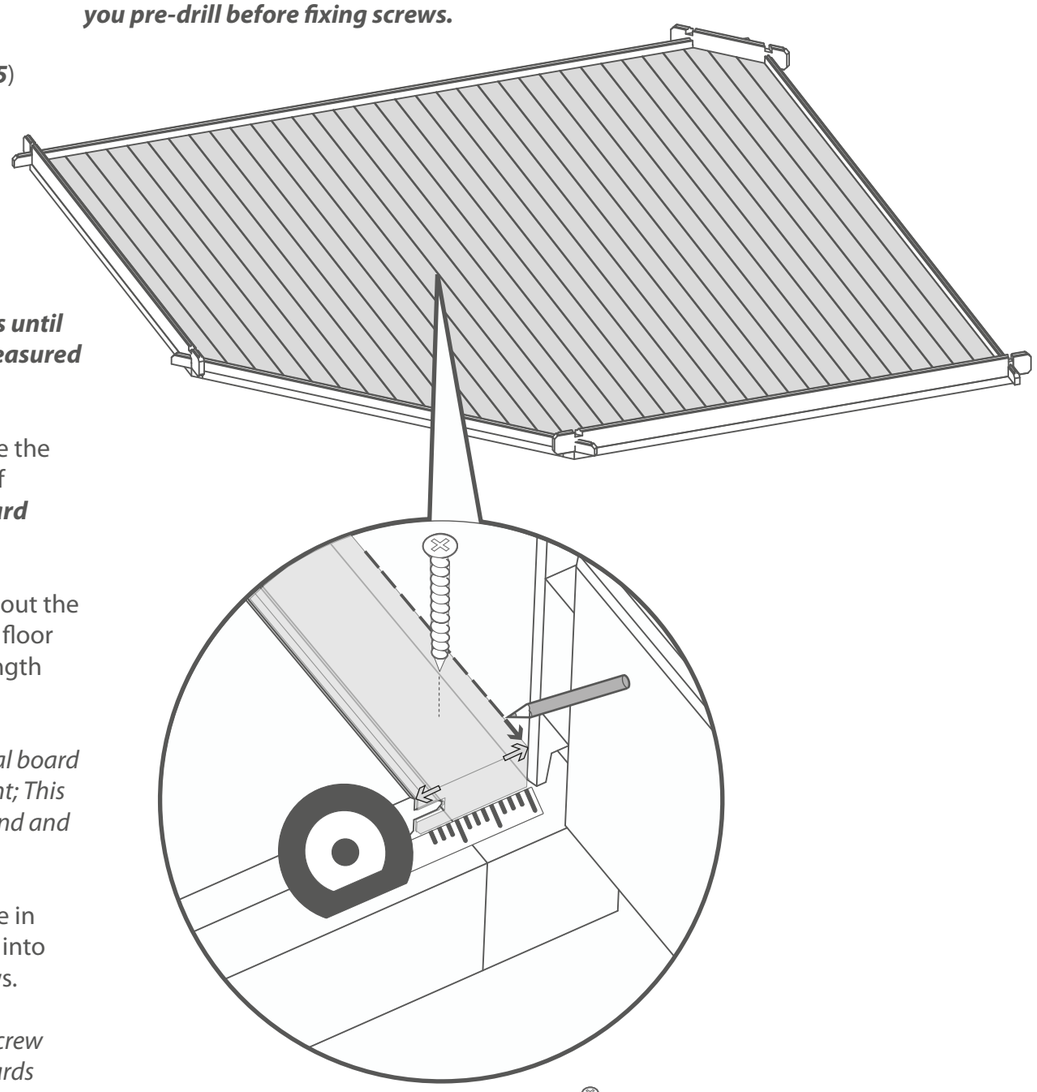

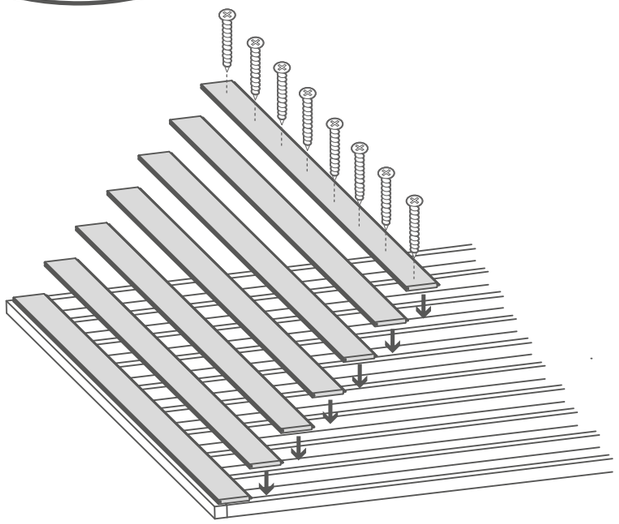

Step 24

Inside the building place an internal roof trim (***No. 59***) against the boarding and align with the roof as shown in the illustration, ensuring the angled face follows the roof line.

Once in position fix each roof trim into place using 40mm screws per roof trim, equally spaced along the face of the board.

70x40mm Screws



Measure and cut the interior roof trims to fit the internal space.

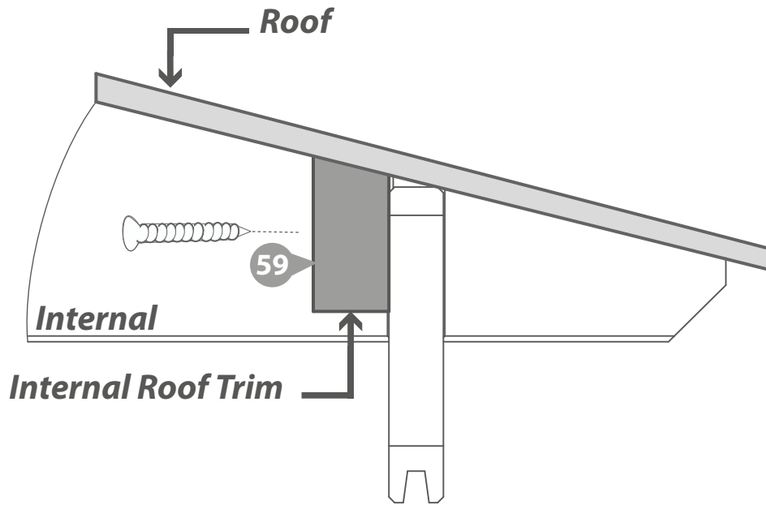

Step 25

Once the floor has been laid arrange the skirting (***No. 58***) around the outside edge of floor (***internally***), measure and cut down accordingly to best match the internal space.

Secure each skirting section into place using 30mm spaced equally along the board as shown in the illustration.

Do NOT fix the skirting to the floor sheets/boards.

70x40mm Screws

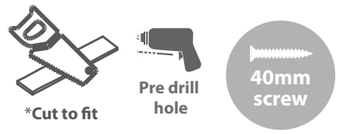

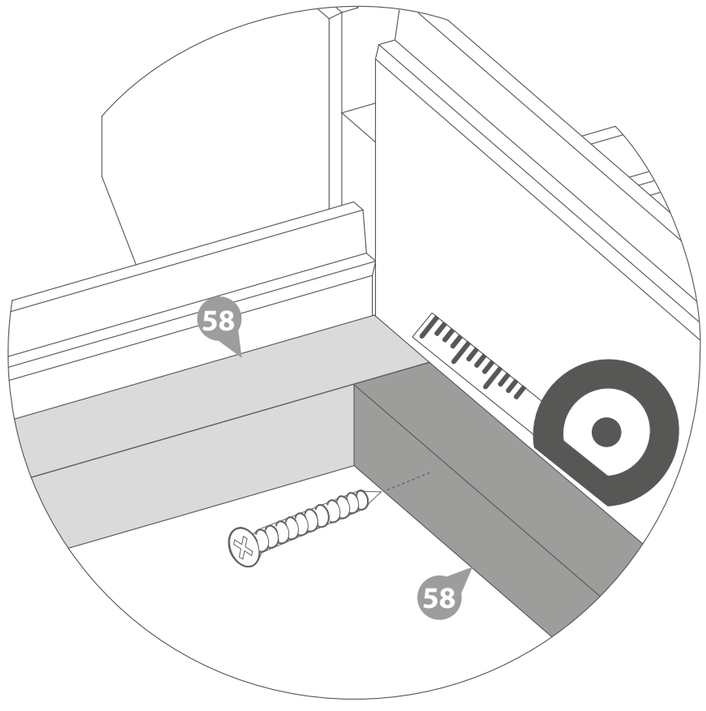

Step 26

Following the individual triangle shape(*s*) of the roof measure and cut the felt (***No. 57***) into the according sizes and lay onto the roof in the order shown in the illustration.

Secure along the outer edge of each felt section using felt tacks spaced out at approximately 100mm intervals.

Ensure there is 50mm of overhanging felt around the base of the roof.

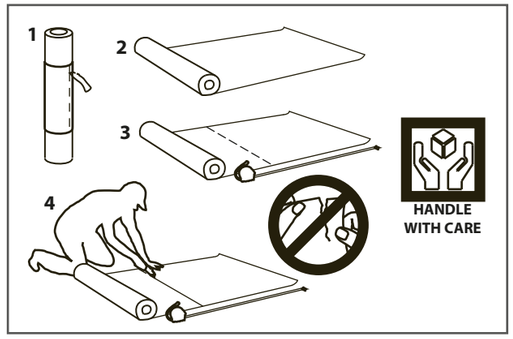

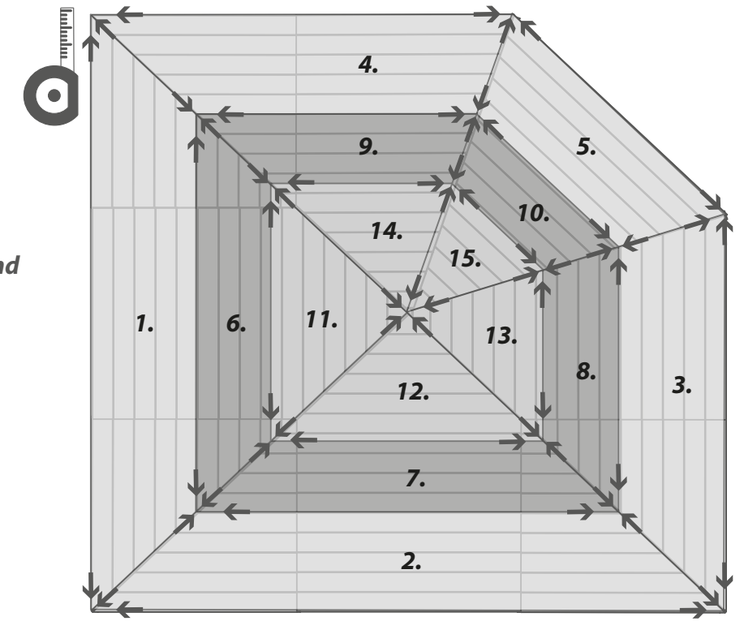

Step 26 *Continued...*

Cut the remaining felt into 5x strips at 200mm wide and approximately 3500mm long and place onto the roof securing into place following the same method outlined in **Step 20.**

1400x Felt Tacks



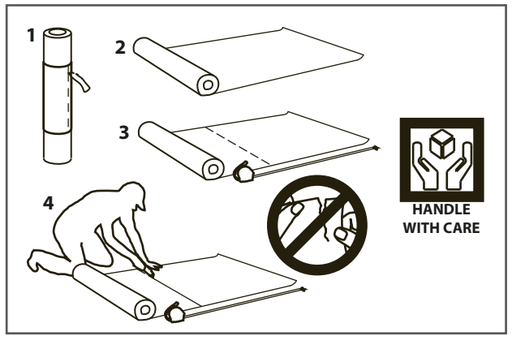

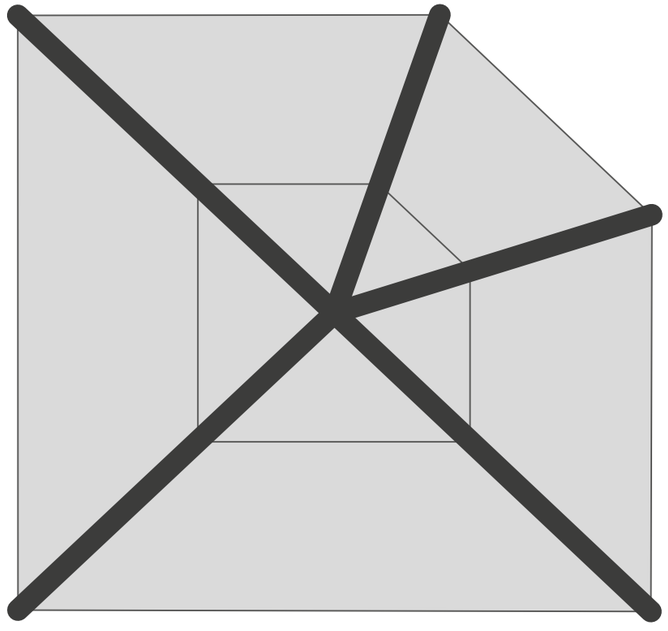

Step 27

Arrange the fascia's (***No's. 47, 48 & 49***) around the building, ensuring to trap the felt between the fascia and the building.

Secure each fascia into position using 40mm screws, making sure to fix through the fascia into the roof purlin, fascia block and/or log boards.

Across the door front fix the fascia (***No. 49***) into position ensuring the there is overhang either side of the fascia. Once in place mark the excess fascia with a pencil and trim the fascias to follow the shape of building as shown in the illustration.

25x40mm Screws



Pre drill hole



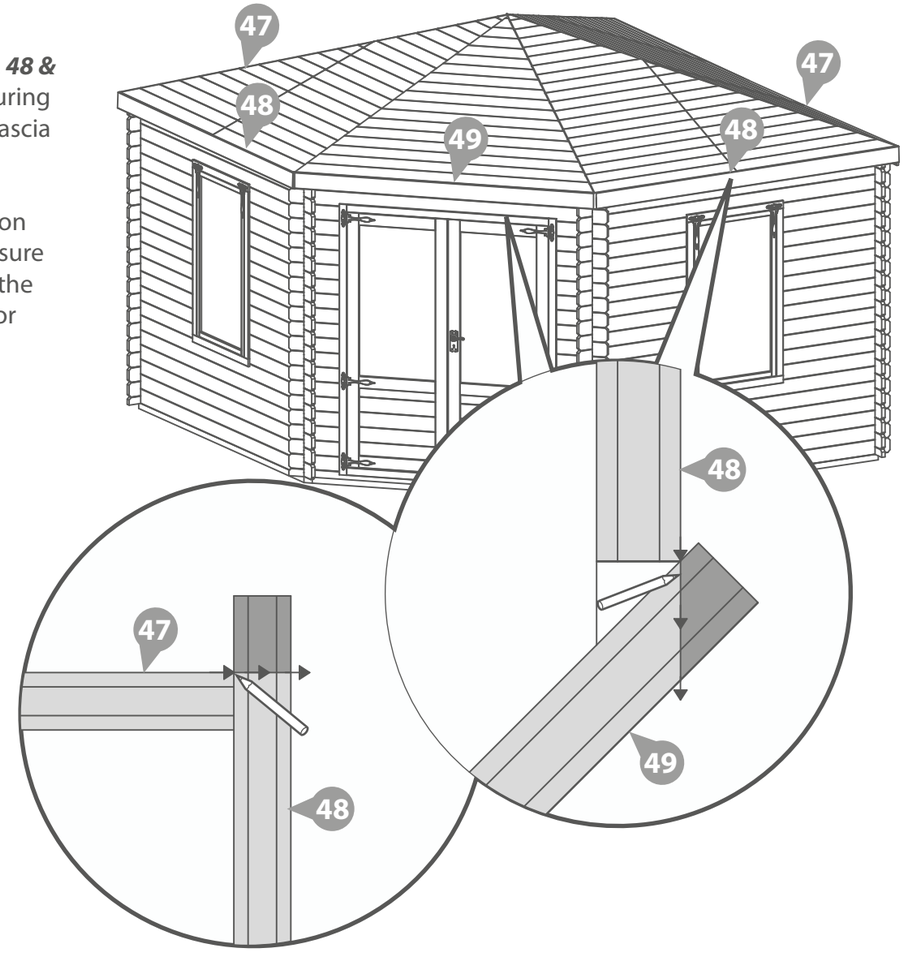

Step 28

Arrange the storm braces (***No. 57***) around the building (***internally***). Place 2x storm braces per side fixing into place using 2x 80mm bolts per brace making sure the washer & nut are tightened from the outside of the building.

****Ensure the storm braces are secured at the highest point possible on each side.***

*****Storm braces will help your building expand and contract properly.***

******It is imperative that each bolt is tightened using a washer so as not to damage the log boards.***

24x80mm Bolt Sets

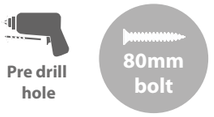

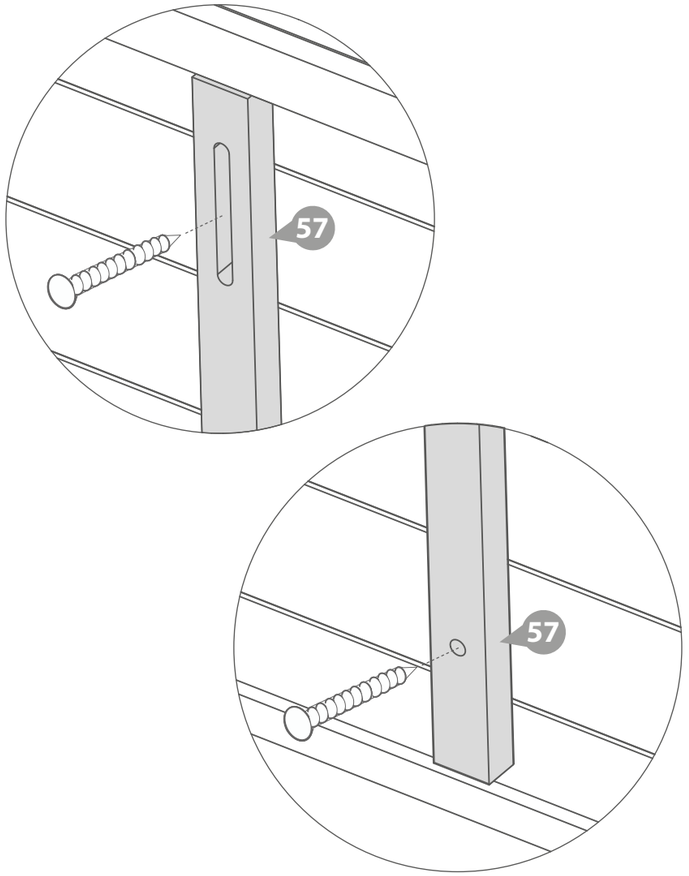

Step 28

