Dimplex®

Studio G

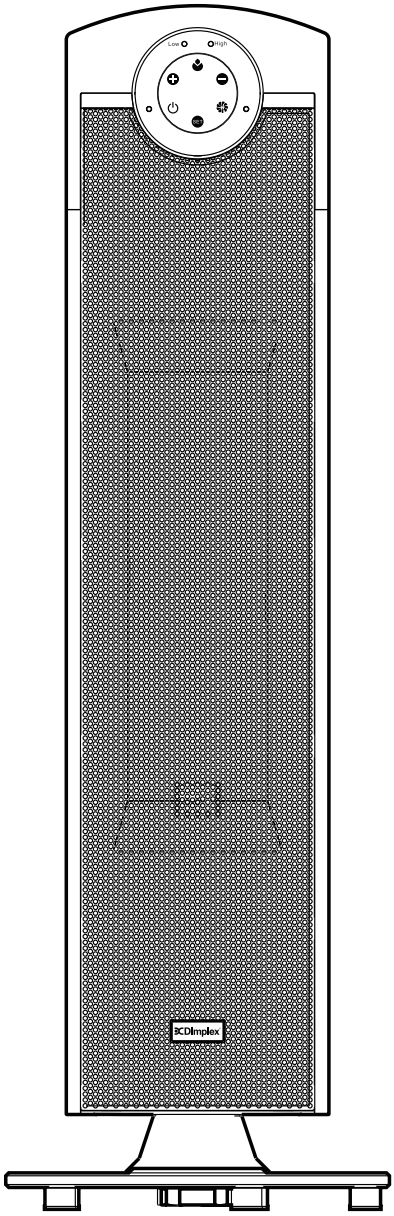

DXSTG25 & DXSTG25G

08/51280/0 Issue 12

As with all portable heating appliances: This product is suitable only for well insulated spaces or occasional use.

CE UK CA This product complies with all the required European and UK Product Safety, Electromagnetic Compatibility and Environmental Standards. They are fully compliant with the LVD, EMC, RoHS and Eco Design Directives and Regulations.

Installation and Operating Instructions

IMPORTANT : THESE INSTRUCTIONS SHOULD BE READ CAREFULLY AND RETAINED FOR FUTURE REFERENCE

Model(s)	**Specification**	**Dimensions**	**H**	**W**	**D**
DXSTG25 & DXSTG25G	2.5kW, Electronic thermostat, Touch Control	(Millimetres)	825	263	263

IMPORTANT SAFETY ADVICE

DO NOT use the heater in the immediate surroundings of a bath, a shower or a swimming pool.
DO NOT place the heater directly below a fixed socket outlet.
The socket-outlet must be accessible at all times to enable the mains plug to be disconnected as quickly as possible.
DO NOT operate the heater with the mains lead overhanging the front outlet grille.
DO NOT COVER or obstruct the air inlet and outlet openings in any way.
The Heater carries the warning symbol indicating that it must not be covered.

WARNING: In order to avoid overheating, do not cover the heater.
DO NOT use this heater if it has been dropped.
IMPORTANT: If the mains lead of this appliance is damaged, it must be replaced by the manufacturer or its service agent or a similarly qualified person in order to avoid a hazard.
WARNING: In order to avoid a hazard due to inadvertent resetting of the thermal cut-out, this appliance must not be supplied through an external switching device, such as a timer, or connected to a circuit that is regularly switched on and off by the utility.
This appliance can be used by children aged from 8 years and above and persons with reduced physical, sensory or mental capabilities or lack of experience or knowledge if they have been given supervision or instruction concerning the use of the appliance in a safe way and understand the hazards involved. Children shall not play with the appliance. Cleaning and user maintenance shall not be made by children without supervision.
Children of less than 3 years should be kept away unless continuously supervised.
Children aged from 3 years and less than 8 years shall only switch on/off the appliance provided that it has been placed or installed in its intended normal operating position and they have been given supervision or instruction concerning the use of the appliance in a safe way and understand the hazards involved. Children aged from 3 years and less than 8 years shall not plug in, regulate and clean the appliance or perform user maintenance.

CAUTION: Some parts of this product can become very hot and cause burns. Particular attention has to be given where children and vulnerable people are present.
WARNING: Risk of fire – Do not use this appliance connected through an extension lead or any external switching device such as a plug in timer or remote control plug in adaptor. All heating appliances draw high current through the mains supply and any weakness in the design, connections or components in these devices can easily result in overheating of the connection points resulting in melting, distortion and even the risk of fire.
CHOKING HAZARD: The remote control for this unit contains a small battery. Keep the remote away from children and do not swallow the battery. If the battery is swallowed seek medical advice at once.
WARNING: To avoid danger of suffocation please remove all packaging materials particularly plastic and EPS and keep these away from vulnerable people, children and babies.
WARNING: To avoid the risk of accidental strangulation from the supply cord all children and vulnerable people must be supervised when in the vicinity of the product whether it is working or not.
WARNING: Do not use this heater in small rooms when they are occupied by persons not capable of leaving the room on their own, unless constant supervision is provided.
DO NOT use if there are visible signs of damage to the heater.
IMPORTANT: Use this heater on a horizontal and stable surface.
DO NOT use the heater on deep pile carpets or the long hair type of rugs, or less than 750mm (30”) away from any overhanging surface. Keep combustible materials such as drapes and other furnishings clear from the front, sides and rear of the heater. Do not use heater to dry your laundry.
WARNING: To reduce the risk of fire, keep textiles, curtains or any other flammable material a minimum distance of 1m from the air outlet.

This instruction leaflet belongs to the appliance and must be kept in a safe place. If changing owners, the leaflet must be surrendered to the new owner.

Product Features

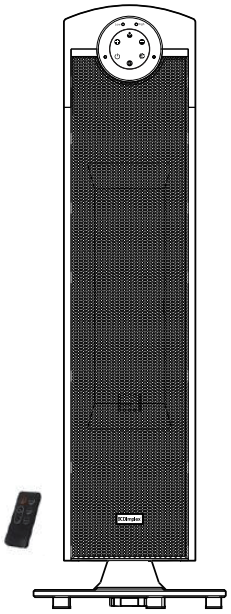

Fig. 1

2 heat power selections
Touch control panel
Remote control
Timer (1-12 hours)
Oscillation function (76°)
LED function indicators
Overheat protection
Tip-over protection
Removable air filter for easy cleaning
Temperature setting from 15°C to 35°C

Assembly Instruction

Open the packing, remove the unit and unscrew to open the base locknut.

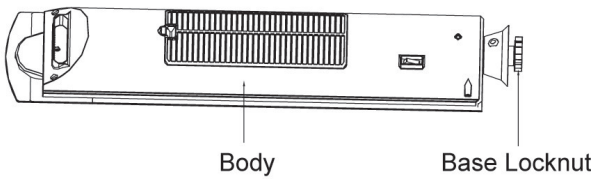

Fig. 2

Fit the glass base onto the bottom of the unit and securely screw on the base locknut.

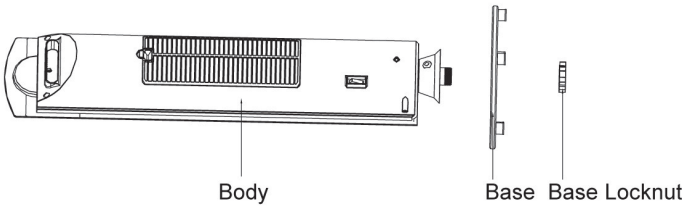

Fig. 3

The unit is now assembled and should be placed upright; always ensure it is placed on a flat stable surface for use.

Parts Description

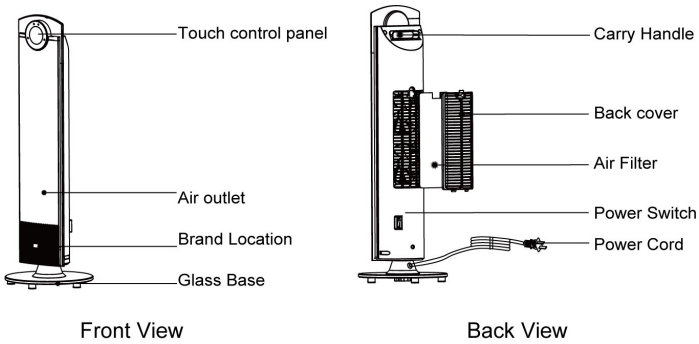

Fig. 4

Operating Instruction

Plug in the appliance to a power source matching that on the units rating label.

Power switch

The power switch is located below the removable air filter at the rear of the unit (See Fig. 4)

Press the power switch to "I" position. You should hear a beep sound; the heater is now ready for use. Pressing the switch to "0" position turns off the heater.

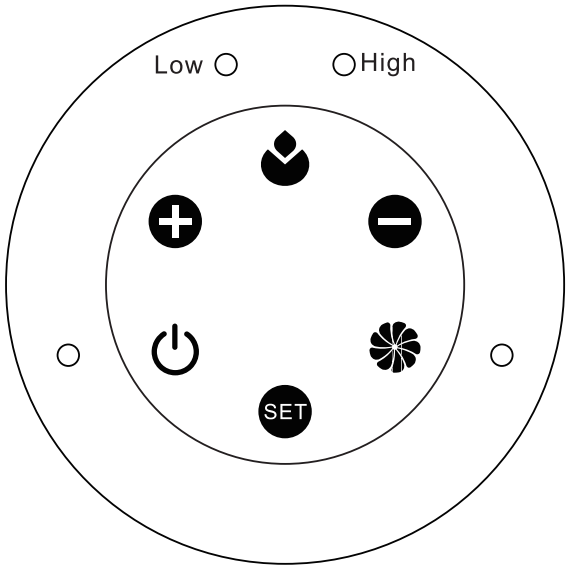

Fig. 5

STANDBY

Press the standby "⏻" key, the power indicator light will turn ON. The heater begins operation at low heat power
(LED indicator on the heating function shows "LOW").

Press this key again and all functions will stop. The LED indicator turns off and the unit is back

HEAT

When the unit is operated at low heating power, press the "🔥" key, the high heating power will be turned on, and the LED indicator will show "HIGH".
Pressing this key allows for the selection of either low heat or high heat power options.

OSC (Oscillation)

When the unit is operating, press the "✱" key, the heater body will begin turning left and right automatically up to 76°. The LED indicator of this oscillation function will be turned on.
Press this key again, the oscillation function will stop and the LED light will turn off.

MODE

When the unit is in operation, press the "SET" button to set the timer or thermostat.
Note: when the set key "SET" has been pressed to set the timer or change the required temperature, the LED light will flicker for approx 5 seconds.
During this 5 second interval changes can be inputted by pressing the "⊕" or "⊖" keys. However if after pressing the set key "SET" no further buttons are pressed the unit will return to display the room temperature and to make further changes the process needs to begin again.

Setting the timer:

Press the key, the light will show "0 h", then press the "⊕" or "⊖"keys to set the working time, (within a range of 1-12 hours).
The time can increase or decrease in intervals of 1 hour/each by pressing the "⊕" or "⊖ "keys. The display will show the final time you have set.

Setting the thermostat:

When the timer has been set (if desired), press the "SET" again. The LED displays 35°C, now you can adjust the thermostat to your required temperature setting. The temperature setting is increased or decreased in intervals of 1°C/each press of the "⊕" or "⊖"keys. The display will show the final temperature you have set.
Range 15 - 35°C)
When the room temperature is ≤ -10°C, the LED display will show as "LO"
When the room temperature is > 40°C, the LED display will show as "HI".
When the room temperature is between -10°C to 40°C, then the LED display will show the corresponding temperature by number.

Remote Control

REPLACING THE BATTERY

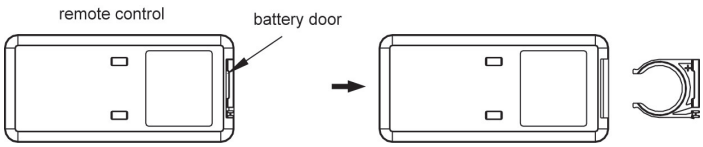

Fig. 6

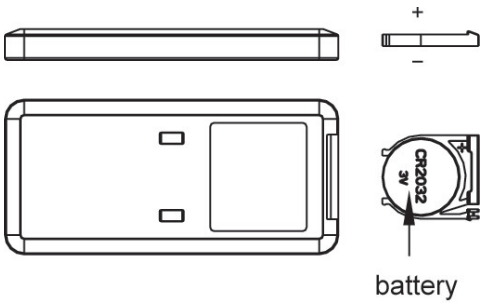

Fig. 7

Slide out the battery holder at the rear of remote control. (Fig. 6)
Insert a 3V Li battery (CR 2032) into the tray of the door, battery text facing up. (Fig. 7)
Slide the battery holder back into the remote control; it is now ready for use.

OPERATION

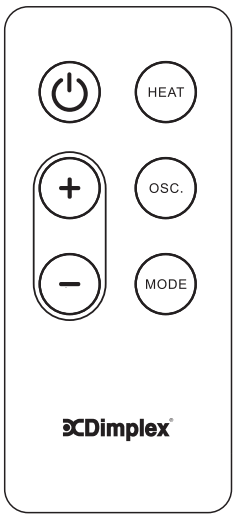

Fig. 8

There are six function keys on the remote control and their functions match those on the control panel of the heater.
When operating the remote control, always point the remote towards the display window of the heater retaining line of sight with the heater and away from any walls; the signal distance is approx. 6 meters.

Cleaning and Maintenance

Switch off the appliance first and disconnect the plug from the socket. Clean the surface with a moist cloth, vacuum cleaner or brush. Do not use any abrasive or caustic cleaning agents. Do not use any flammable cleaning agents e.g. petrol or spirit for cleaning the appliance. Never immerse the appliance in water. Air inlet and outlet area should be cleaned with a vacuum cleaner regularly· If the appliance is not used for extended periods, it must be protected against excessive dust and dirt.

It is reccomended to clean the air filter monthly.
See Fig. 9 to remove the air filter for cleaning. Do not use any chemicals for cleaning the filter.
Use a soft cloth/duster to wipe away the dust. If you use water for cleaning, please make sure the air filter is completely dry before placing the filter back into the unit.

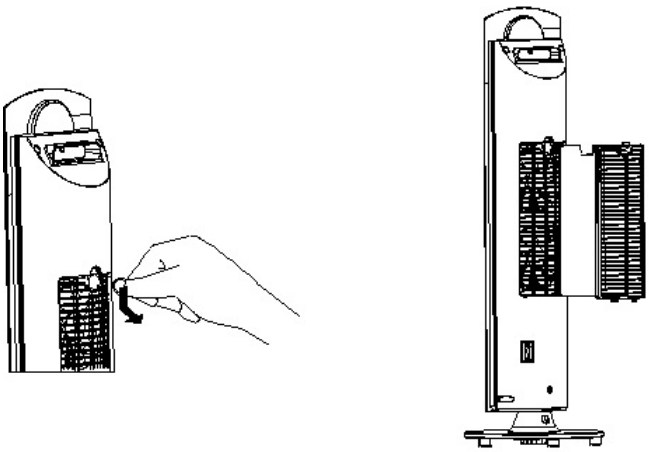

Fig. 9

Recycling

For electrical products sold within the European Community.
At the end of the electrical products useful life it should not be disposed of with household waste. Please recycle where facilities exist. Check with your Local Authority or retailer for recycling advice in your country. If you don't intend to keep the packaging of this product for later use or storage, please dispose of it in an environmentally friendly way, please dispose of it in your recycling bin or nearest recycling facility, thank you.

Model Identifier(s):		**DXSTG25 & DXSTG25G**	
Heat output			
Nominal heat output	Pnom	2.5	kW
Minimum heat output (indicative)	Pmin	1.3	kW
Maximum continuous heat output	Pmax,c	2.4	kW
Auxiliary Electricity Consumption			
At nominal heat output	Elmax	0.0	kW
At minimum heat output	Elmin	0.0	kW
In standby mode	ElSB	0.001	kW
Type of heat output/ room temperature control			
Electronic room temperature control			Yes
Contact details	**UK**: Glen Dimplex UK Ltd., Millbrook House, Grange Drive, Hedge End, Southampton SO30 2DF **ROI**: Glen Dimplex Europe Limited, Airport Road, Cloghran, County Dublin, K67 VE08		

Guarantee

What does a Dimplex Guarantee cover?

Dimplex products deliver reliable service for normal, household use in domestic settings. All Dimplex products are individually tested before leaving the factory.

If you are a consumer and you experience a problem with your Dimplex product, which is found to be defective due to faulty materials or workmanship within the Guarantee Period, this Dimplex Guarantee will cover repair or - at the discretion of Dimplex – replacement with a functionally equivalent Dimplex product.

Your product is under guarantee for 1 year from the date of purchase or the date of delivery of the product, if later. The 1 year guarantee is extended for an additional 2 years when you register the product with Dimplex, within 28 days of purchase. If you do not register the product with Dimplex within 28 days, your product will remain guarranteed for 1 year only. To validate your extended guarantee register with us online at: http://register.dimplex.co.uk. N.B. Each qualifying product needs to be registered with Dimplex individually. Please note that the extended guarantee is only available in the UK and Ireland.

The Dimplex Guarantee is conditional upon you providing the original purchase receipt as proof of purchase. Please therefore retain your receipt as proof of purchase.

If you do experience a problem with your Dimplex product please call the Helpline on +44 [0]344 879 3588 or visit https://www.dimplex.co.uk/support. For ROI please email serviceireland@glendimplex.com or call +353(0)1 842 4833. We will need details of your Dimplex product and a description of the fault which has occurred. Once we receive your information and proof of purchase we will contact you to make the necessary arrangements. If your Dimplex product is not covered by this Dimplex Guarantee there may be a charge to repair your product. However, we will contact you for agreement to any charges before any chargeable service is carried out.

What is not covered by a Dimplex Guarantee?

The Dimplex Guarantee does not cover any of the following:

Any fault or damage to your Dimplex product due to faulty materials or workmanship occurring outside the Guarantee Period.

Normal wear and tear including parts that might wear out over time or consumables, such as filters.

Any fault or damage occurring to any pre-owned Dimplex product or to any other equipment or property.

Accidental damage to your Dimplex product or damage to your Dimplex product from external sources (for example, transit, weather, electrical outages or power surges).

Fault or damage to your Dimplex product which is:

•Not due to faulty materials or workmanship or which is due to circumstances outside Dimplex's control.

•Caused by use of your Dimplex product for anything other than normal domestic household purposes in the country where it was purchased.

•Caused by any misuse, abuse or negligent use of the Dimplex product, including but not limited to any failure to use it in accordance with the Operating Instructions supplied with the product.

•Caused by any failure to assemble, install clean and maintain your Dimplex product in accordance with the Operating Instructions supplied with the product unless this was carried out by Dimplex or its authorised dealers.

•Caused by repairs or alterations to your Dimplex product not carried out by Dimplex service personnel or its authorised dealer(s).

•Caused by use of any consumables or spare parts for your Dimplex product which are not Dimplex - specified.

Terms and Conditions

The Dimplex Guarantee is valid for 1 calendar year, plus 2 if registered, from the date of purchase of your Dimplex product from a recognised retailer in the country of purchase and use, or the date of delivery of the product if later, always provided the original receipt has been retained and is produced as proof of purchase.

You must provide to Dimplex or its authorised agents on request the original receipt as proof of purchase and - if required by Dimplex - proof of delivery. If you are unable to provide this documentation, you will be required to pay for any repair work required.

Any repair work under the Dimplex Guarantee will be carried out by Dimplex or its authorised dealer(s) and any parts that are replaced will become the property of Dimplex. Any repairs performed under the Dimplex Guarantee will not extend the Guarantee Period.

The Dimplex Guarantee does not entitle you to recovery of any indirect or consequential loss or damage including but not limited to loss or damage to any other property.

The Dimplex Guarantee is in addition to your statutory rights as a consumer and your statutory rights are not affected by this Dimplex Guarantee.

Contact Dimplex A brand of the Glen Dimplex UK Limited, trading as Glen Dimplex Heating & Ventilation

If you have any questions about what the Dimplex Guarantee covers and does not cover or how to claim under the Dimplex Guarantee, please contact us:

Glen Dimplex Heating & Ventilation, Grange Drive, Hedge End, Southampton SO30 2DF
Telephone: 0344 879 3588
Visit: www.dimplex.co.uk

[c] Glen Dimplex.
All rights reserved. Material contained in this publication may not be reproduced in whole or in part, without prior permission in writing of Glen Dimplex.